INSTALLATION-OWNERS MANUAL

#18-23-001

besam®

ELECTRA™ 150

Swing Door Operator

(With Slimline Cover)

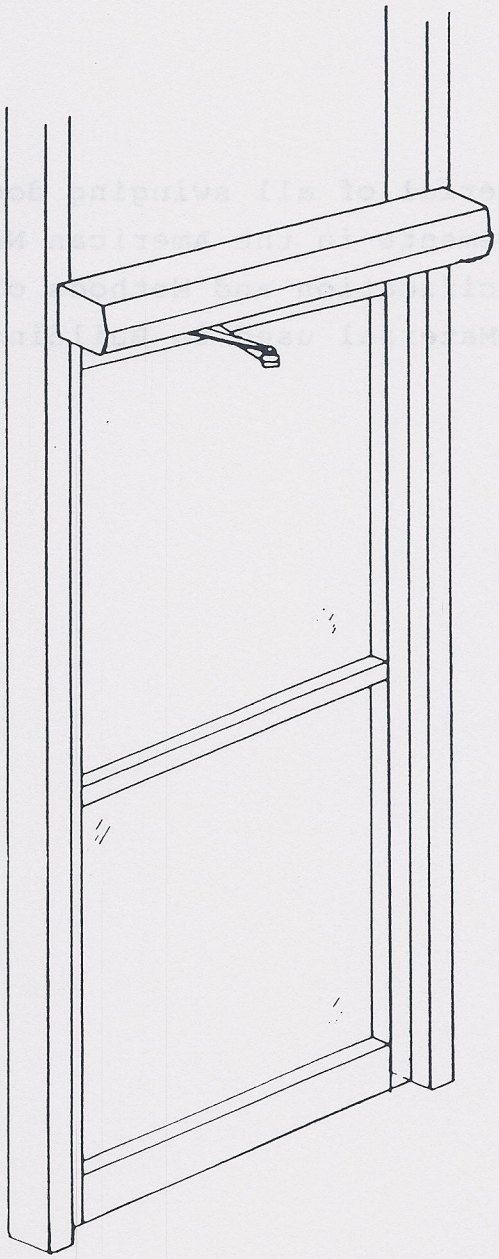

NOTE: The glazing material of all swinging doors shall comply with the requirements in the American National Standard Performance Specification and Methods of Test for Safety Glazing Material used in Buildings. z97.1-1972

CONTENTS

1- INSTALLATION DRAWINGS:

Regular outswing regular arm.....D-15003
Regular outswing Z arm.....D-15004
Regular outswing Z arm with shaft extension.....D-15005

2- INSTALLATION INSTRUCTION:

Standard installation.....1
Installing the mounting back plate.....2
Adjustment of the mounting back plate.....3
Mounting the drive unit.....4
Mounting the control unit.....5
Mounting the door bracket.....6
Mounting the adaptor.....7
Electrical connections.....9

3-INSTALLATION DRAWINGS:

Parallel inswing slide track system
for hinge hung applications.....D-15001
Parallel inswing slide track system
for center pivot applications.....D-15002.

4-INSTALLATION INSTRUCTIONS:

Preperation for main arm.....11
Installing back plate.....12
Mounting of main arm.....13
Mounting of door fitting.....14
Adjusting opening and closing speeds.....15
Cover installation.....17

5-TECHNICAL DATA.....18

6-FAULT FINDING PROCEDURES.....18-19

7-ELECTRA 150 CONNECTION DRAWING.....20-21

8-SPARE PARTS LIST 22-23

INSTALLATION STANDARD ARM SYSTEM

RIGHT HAND DOOR **LEFT HAND DOOR**

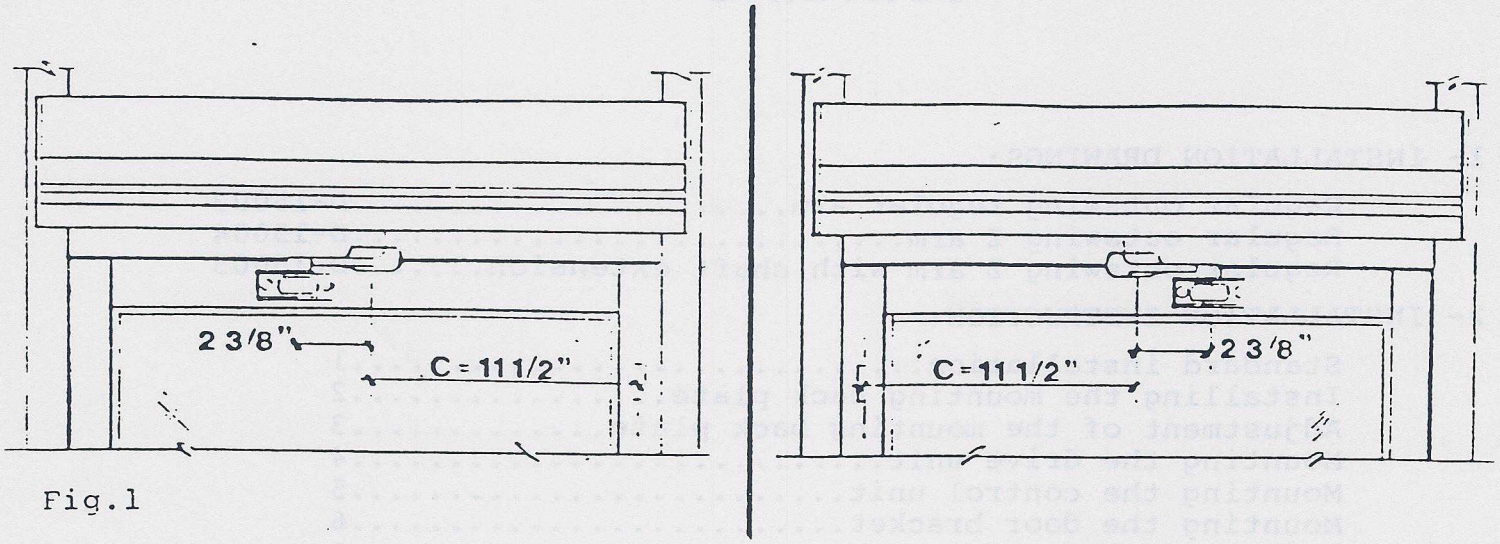

Fig.1

STANDARD INSTALLATION

Standard installation implies that the measurement "C" which is the distance between the center line of the hinge/pivot and the center point of the operator is always 11 1/2". Standard installation applies only if the conditions below are fulfilled.

- The reveal (the distance between mounting plate and door may not exceed 6").
- The door weight may not exceed 200 lbs.
- The door width may not exceed48".
- No special demands on the opening angle of the door (will be approximately 90 degrees).

For standard installation with the above conditions fulfilled, an operator with fully acceptable function is obtained.

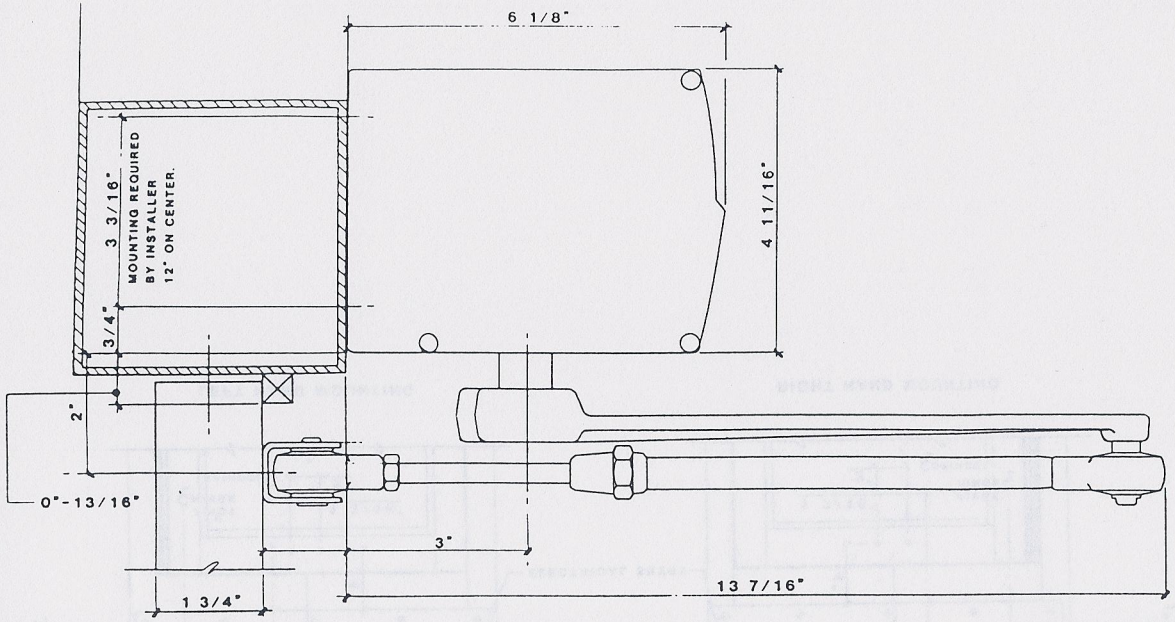

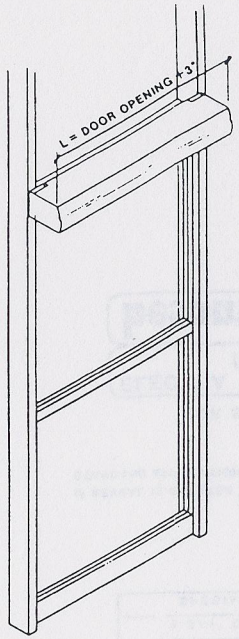

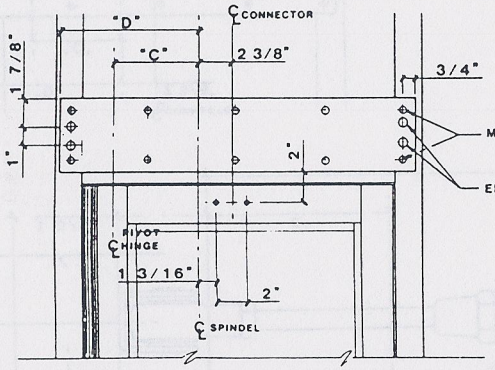

LEFT HAND MOUNTING

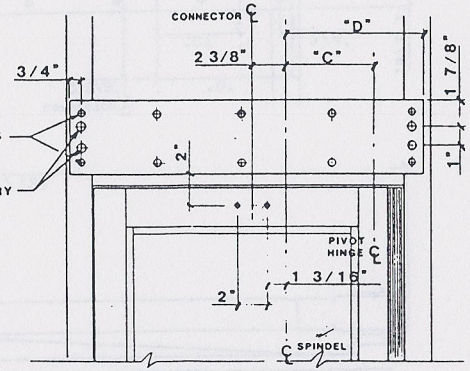

RIGHT HAND MOUNTING

TYPE APPLICATION	"C"	"D"
HINGE HUNG	11 1/2"	12 7/8"
2 3/4" C.P.	11 1/2"	15 5/8"
3 3/4" C.P.	11 1/2"	16 5/8"
SPECIAL CONSULT FACTORY		

IF REVEAL IS GREATER THAN 3" A SPECIAL TELESCOPIC ROD IS REQUIRED.
STANDARD APPLICATIONS-MAXIMUM REVEAL IS 6"

FOR SLIMLINE HEADER

ELECTRA 150 INSTALLATION for REGULAR ARM

TITLE

2/20/86

DATE

besam

171 TWIN RIVERS DR.
EAST WINDSOR, N.J. 08520
609-443-5800

D-15003

DWG NO.

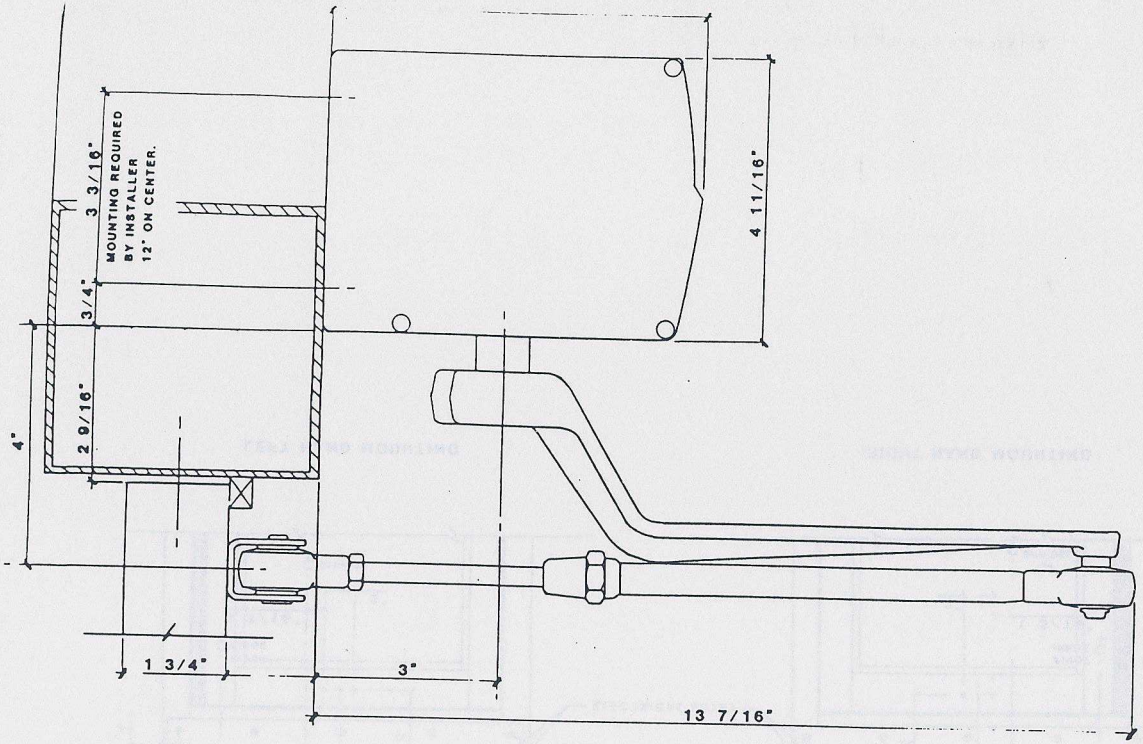

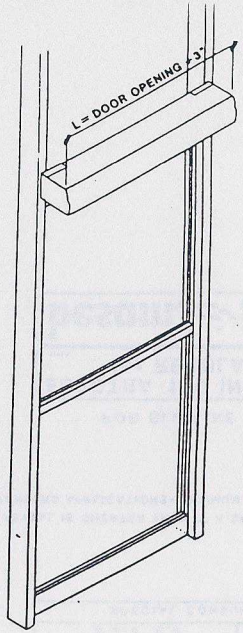

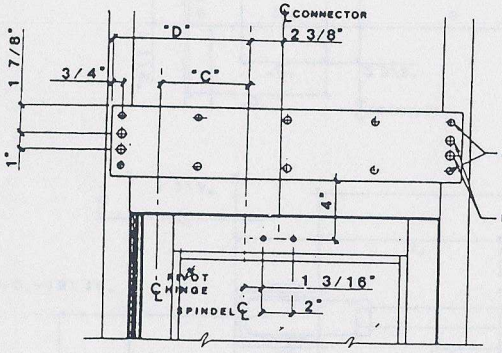

LEFT HAND MOUNTING

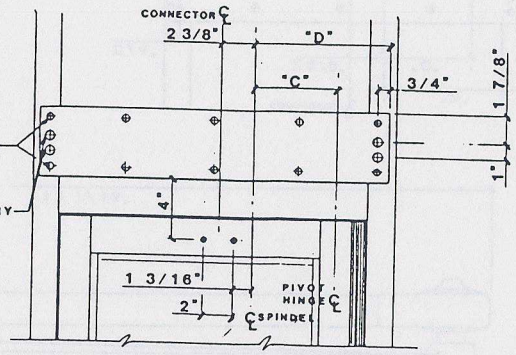

RIGHT HAND MOUNTING

MOUNTING HOLES

ELECTRICAL ENTRY

TYPE APPLICATION	"C"	"D"
HINGE HUNG	11 1/2"	12 7/8"
2 3/4" C.P.	11 1/2"	15 5/8"
3 3/4" C.P.	11 1/2"	16 5/8"
SPECIAL CONSULT FACTORY		

IF REVEAL IS GREATER THAN 3" A SPECIAL TELESCOPIC ROD IS REQUIRED.
STANDARD APPLICATION-MAXIMUM REVEAL IS 6"

FOR SLIMLINE HEADER

TITLE: ELECTRA 150 INSTALLATION for Z ARM

DATE: 2/20/86

besam

171 TWIN RIVERS DR.
EAST WINDSOR, N.J. 08520
609-443-5800

DWG. NO. D-15004

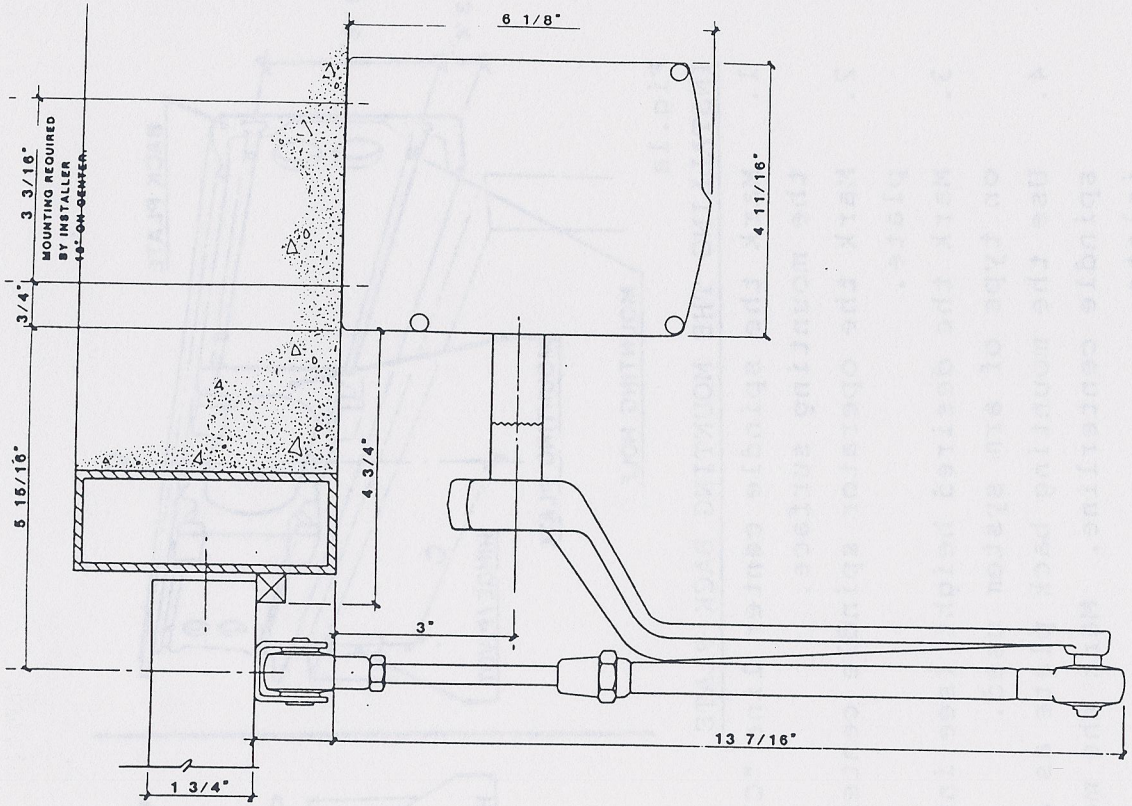

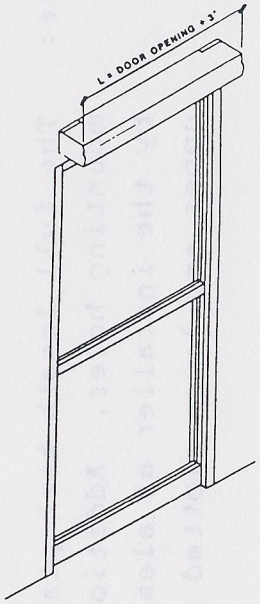

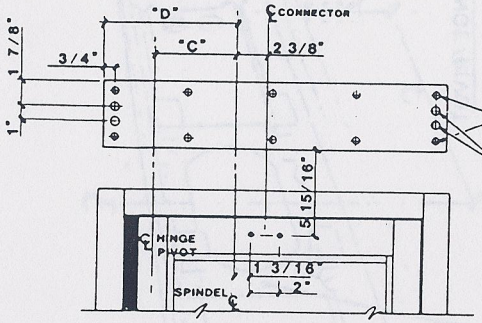

LEFT HAND MOUNTING

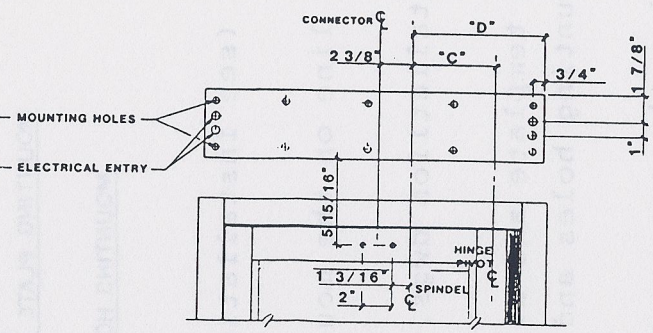

RIGHT HAND MOUNTING

TYPE APPLICATION	"C"	"D"
HINGE HUNG	11 1/2"	12 7/8"
2 3/4" C.P.	11 1/2"	15 5/8"
3 3/4" C.P.	11 1/2"	16 5/8"
SPECIAL CONSULT FACTORY		

IF REVEAL IS GREATER THAN 3" A SPECIAL TELESCOPIC ROD IS REQUIRED.
STANDARD APPLICATIONS-MAXIMUM REVEAL IS 6"

FOR SLIMLINE HEADER

TITLE: ELECTRA 150 INSTALLATION for SHAFT EXTENSION

DATE: 2/20/86

besam

171 TWIN RIVERS DR.
EAST WINDSOR, N.J. 08520
609-443-5800

D-15005
DWG NO.

INSTALLATION STANDARD ARM SYSTEM

RIGHT HAND DOOR

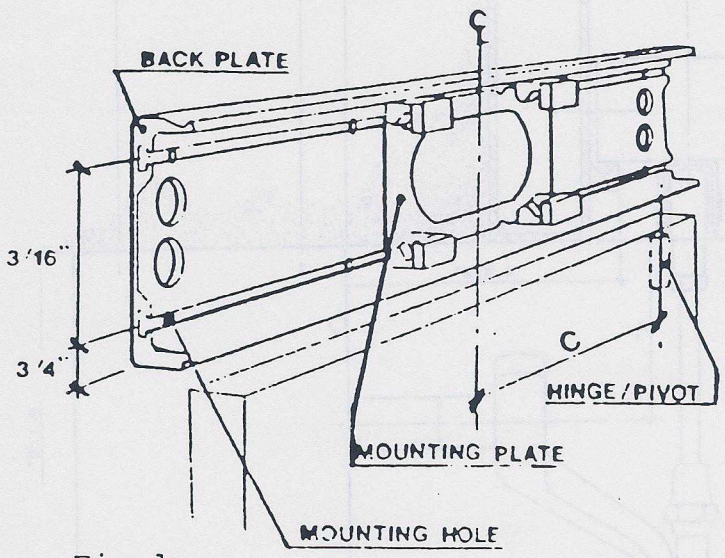

LEFT HAND DOOR

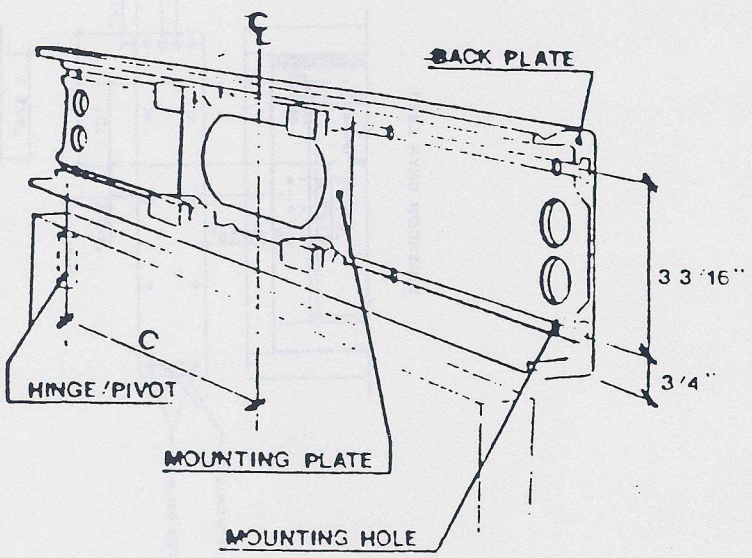

Fig.1a

INSTALLING THE MOUNTING BACK PLATE

1. Mark the spindle center line "C" (see installation dwgs.) on the mounting surface.
2. Mark the operator spindle center line on the mounting back plate.
3. Mark the desired height (see installatiion dwgs.) depending on type of arm system used.
4. Use the mounting back plate as a template and align the spindle centerline. Mark the mounting holes and electrical inlets.
5. Check that the mounting surface has the necessary reinforcement. Drill and tap or install rivnuts (Fig.1b). Run Electrical power.
6. Ensure that the mounting back plate is level.

Note: The full length back plate has only 4 predrilled mounting holes. Additional holes must be prepared by the installer at aleast 12" on center in both the upper and lower slotted nut areas.

INSTALLATION STANDARD ARM SYSTEM

MOUNTING MATERIAL	MINIMUM REQUIREMENT
Steel	3/16"*
Aluminum	1/4"*
Reinforced Conrete	2" from the under-side
Wood	2"

*Thin-wall profiles must be reinforced with Rivnut.

Fig.1b Note: Back plate is not self supporting

RIGHT HAND DOOR **LEFT HAND DOOR**

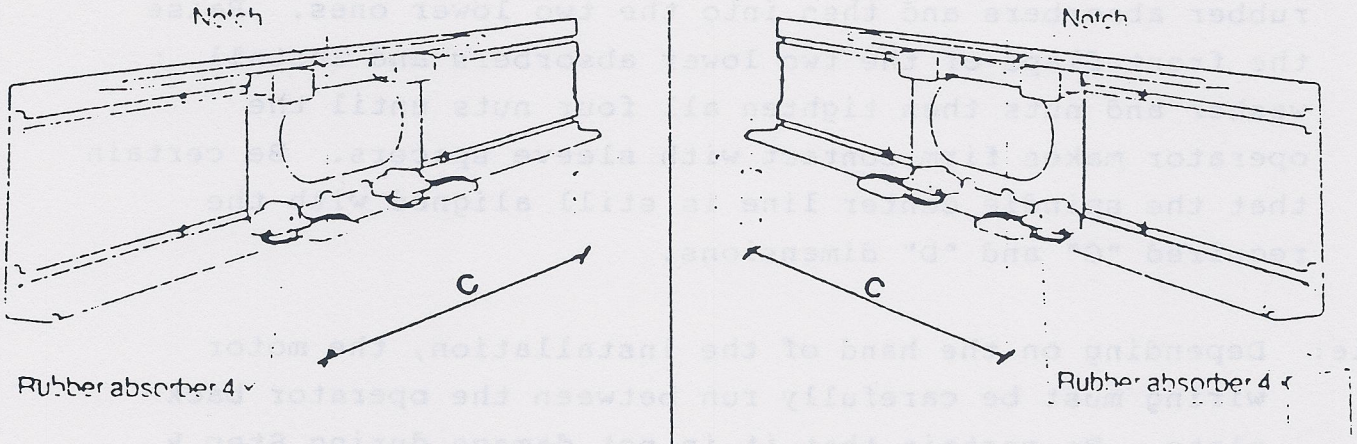

Fig.2

ADJUSTMENT OF THE MOUNTING BACK PLATE

7. Adjust the operator mounting plate so that the notch is aligned with the "C" and "D" spindle locations on installation drawings. (Fig.2)
8. Unscrew the two lower nuts and lower the front flaps of the rubber absorbers, lossen the two upper nuts, without unscrewing them so loose that the front flaps come loose.

INSTALLATION STANDARD ARM SYSTEM

RIGHT HAND DOOR **LEFT HAND DOOR**

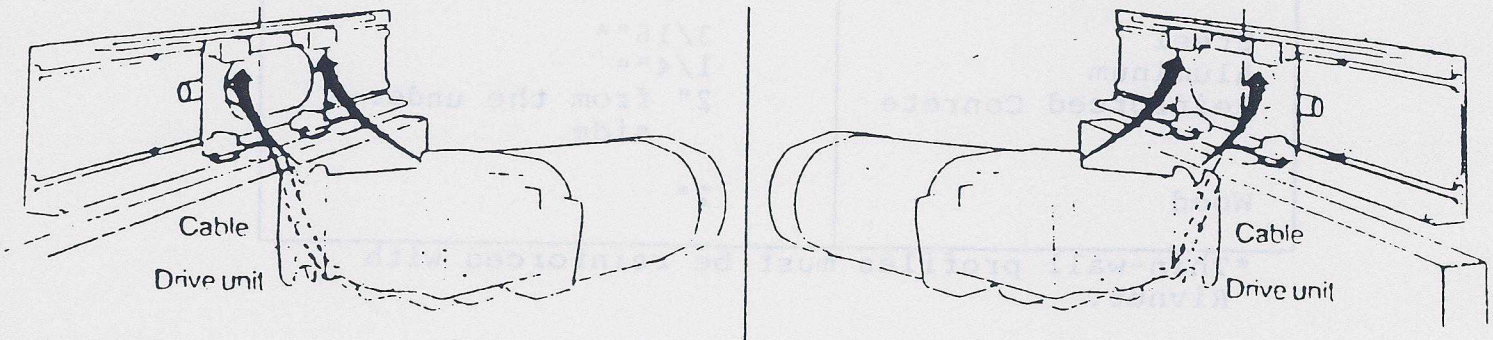

Fig.3

MOUNTING THE DRIVE UNIT

9. Insert the operator drive unit first into the two upper rubber absorbers and then into the two lower ones. Raise the front flaps of the two lower absorbers and install washer and nuts then tighten all four nuts until the operator makes firm contact with sleeve spacers. Be certain that the spindle center line is still aligned with the required "C" and "D" dimensions.

Note: Depending on the hand of the installation, the motor wiring must be carefully run between the operator back plate. Be certain that it is not damage during Step 9. (Fig. 3)

INSTALLATION STANDARD ARM SYSTEM

RIGHT HAND DOOR **LEFT HAND DOOR**

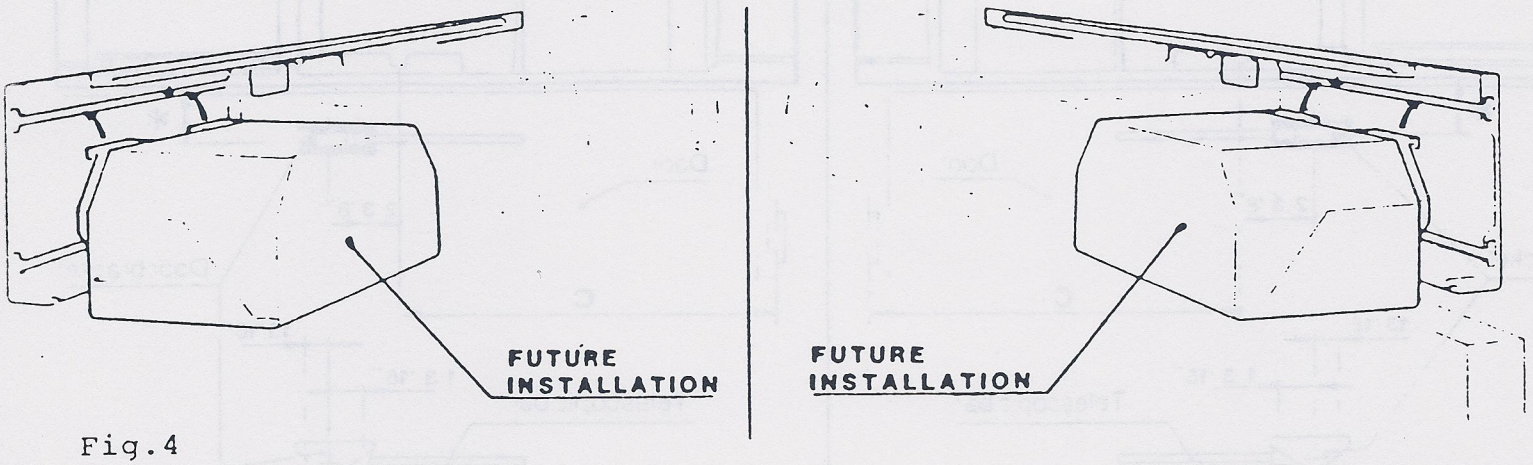

Fig.4

MOUNTING THE CONTROL UNIT

Install the control unit to the two bolts provided in the back plate. Be certain to ground the control unit with the green ground wire coming from it to the additional nut located between the two mounting bolts. Fig. 4 shows the proper location of the control and future controls will snap into place.

INSTALLATION STANDARD ARM SYSTEM

RIGHT HAND DOOR

LEFT HAND DOOR

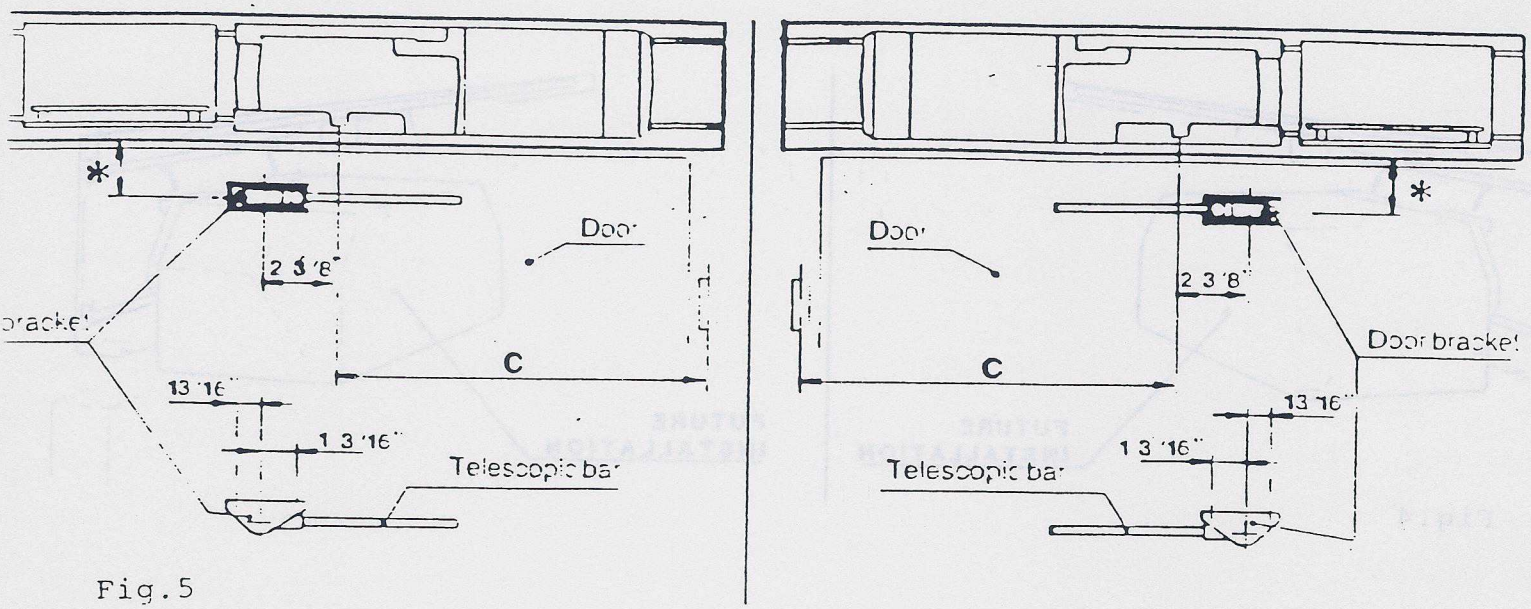

Fig.5

MOUNTING THE DOOR BRACKET WITH TELESCOPIC BAR

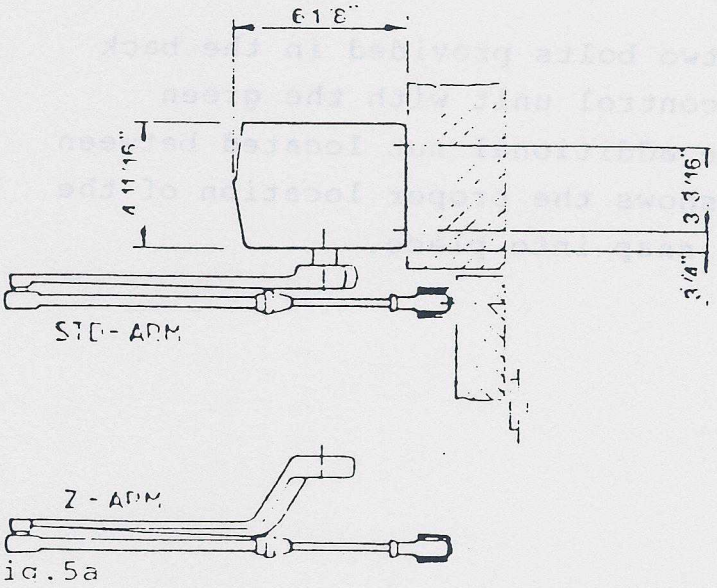

Fig.5a

* SEE INSTALLATION DRAWINGS

1. Remove the door bracket and the telescopic bar from the arm system. Check that the door has the necessary reinforcement. Close the door and transfer the spindle center line to the door.
2. Establish the door bracket center lines from the appropriate installation drawings.
3. Install the door bracket so that the connecting rod end center line is 2 3/8" from the spindle center line.

INSTALLATION STANDARD ARM SYSTEM

RIGHT HAND DOOR **LEFT HAND DOOR**

MOUTNING THE ADAPTOR ON THE ARM

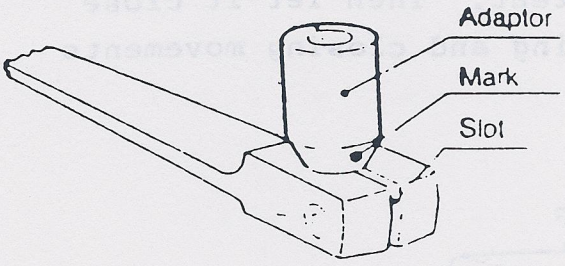

STD-ARM

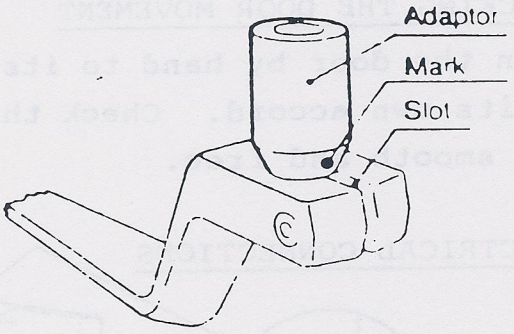

Z-ARM

Fig.6

Mount the adaptor on the arm with the mark aligned with the slot in the arm. Tighten the screw properly.

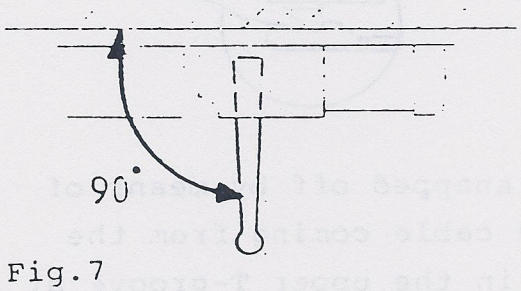

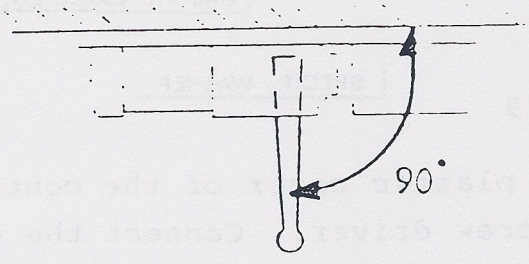

Fig.7

MOUNTING THE ARM

Mount the arm on the shaft of the operator at an angle of 90 degrees to the wall. Ensure that the grooves fit correctly, so they do not get damaged when the arm is tightened.

ADJUSTING THE ANGLES OF THE ARM

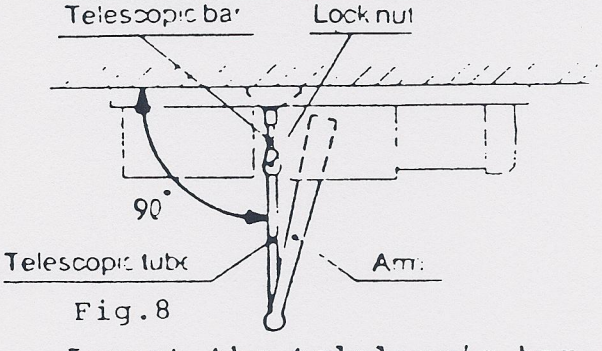

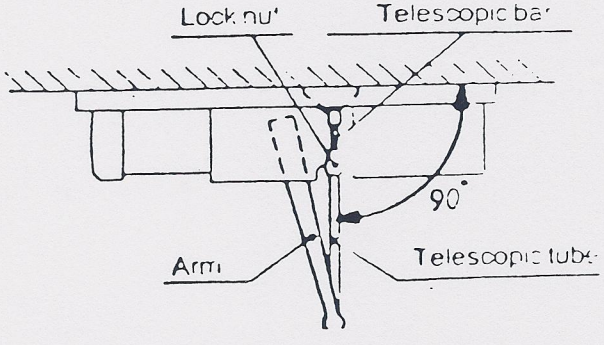

Fig.8

Insert the telelcopic bar in the telescopic tube (do not tighten the lock nut). Close the door and keep it closed. Turn the arm until the telescopic bar/telescopic tube are at an angle of 90 degrees to the door. Tighten the telescopic bar by means of the lock nut.

INSTALLATION STANDARD ARM SYSTEM

CHECKING THE DOOR MOVEMENT

Open the door by hand to its maximum extent. Then let it close of its own accord. Check that the opening and closing movements are smooth and free.

ELECTRICAL CONNECTIONS

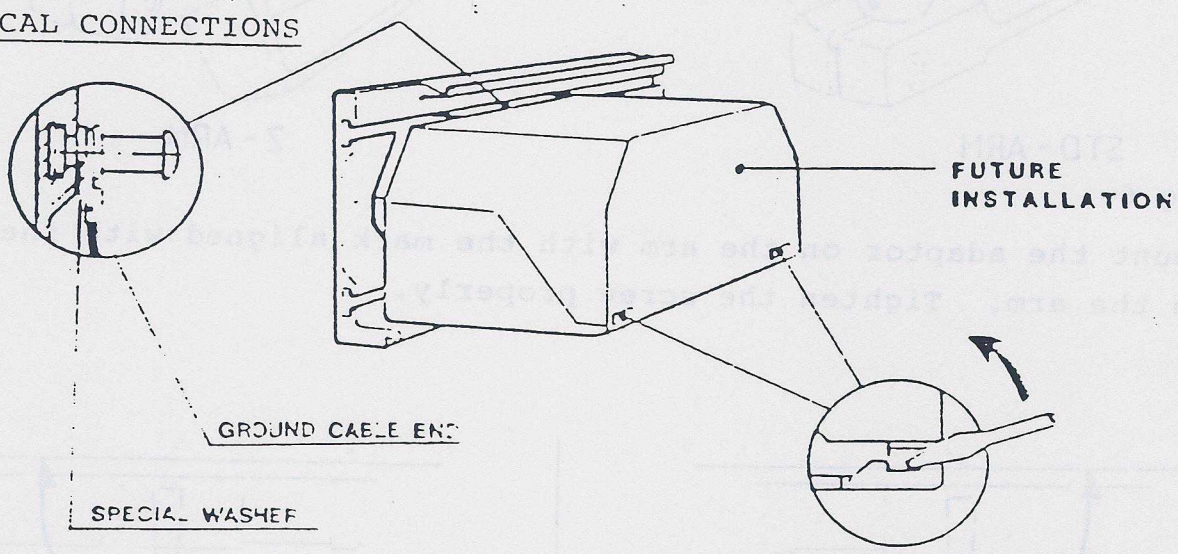

Fig.9

The plastic cover of the control unit is snapped off by means of a screw driver. Connect the green ground cable coming from the PC-board to the ground screw, positioned in the upper T-groove at the recess in the control unit.

Note: It is of great importance that the special washer is placed between the mounting back plate and the ground cable end.

INSTALLATION STANDARD ARM SYSTEM

RIGHT HAND DOOR **LEFT HAND DOOR**

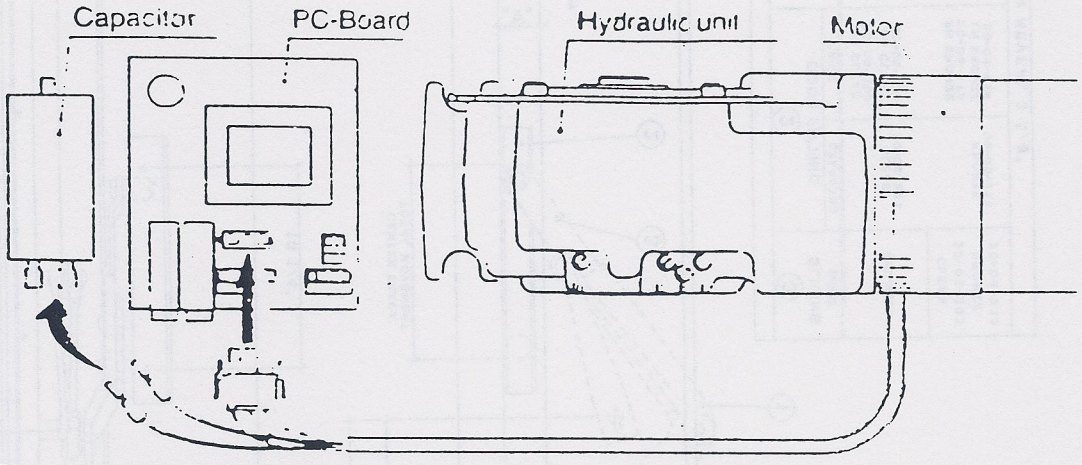

Fig.9a

ELECTRICAL CONNECTIONS

Connect the plug-in connector from the motor to the PC-board. The cable is to be lead behind the hydraulic unit through the recess in the control unit, at the upper T-groove.
Connect the two flat pin connectors to the capacitor. It makes no difference which connector is connected to which contact. The cables necessary for connecting mains voltage and actuating devices are to be connected to the PC-board. (See connection drawing for the relevant control unit/PC-board, page 20).

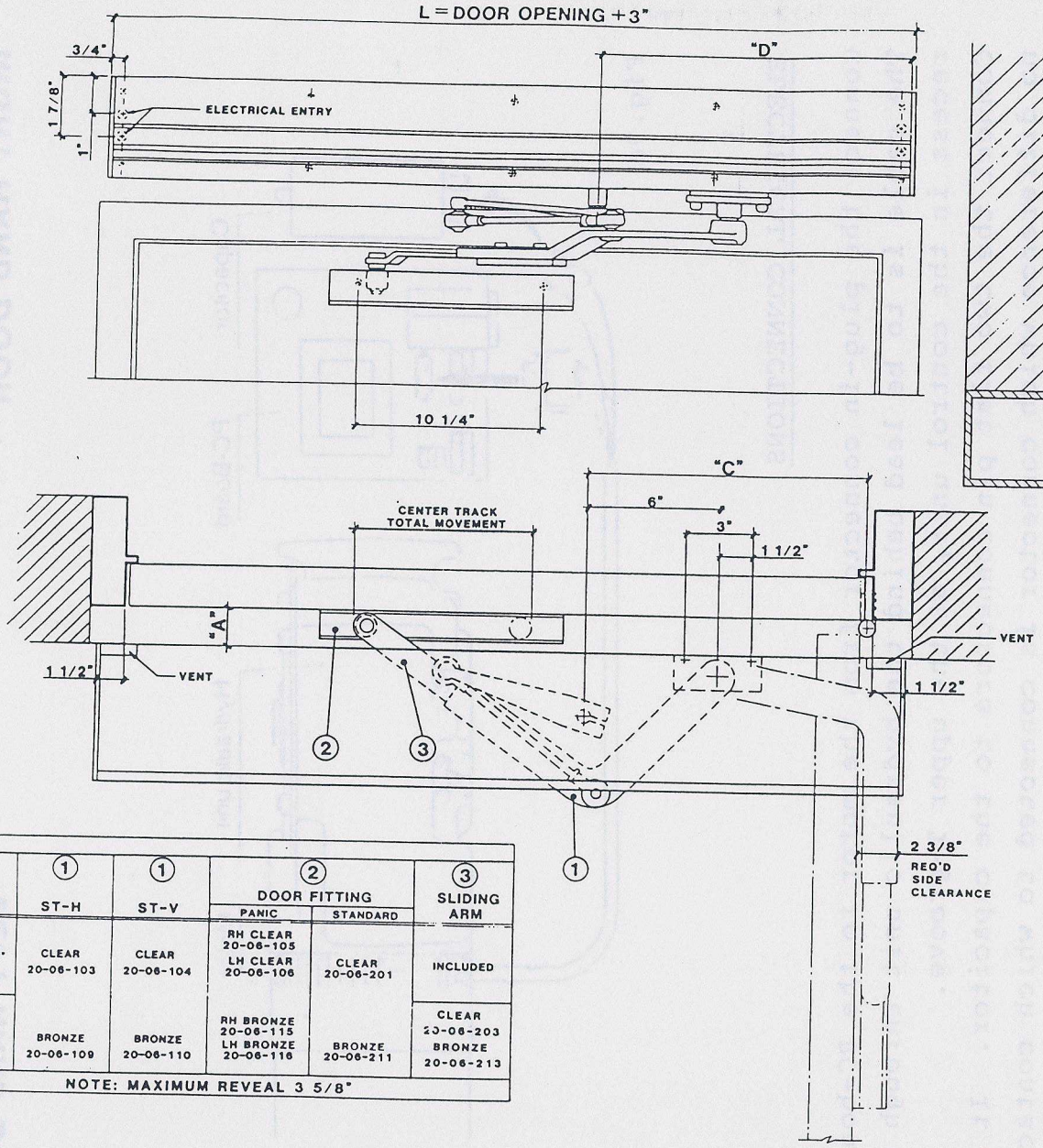

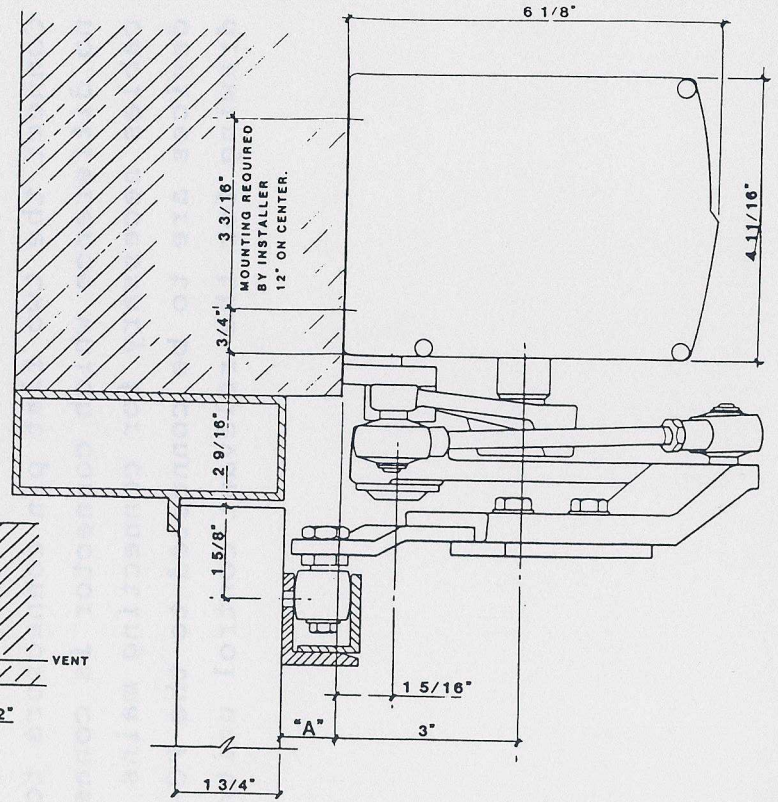

"A" REVEAL	① ST-H	① ST-V	② DOOR FITTING PANIC	② DOOR FITTING STANDARD	③ SLIDING ARM
0"-2 1/16"	CLEAR 20-06-103	CLEAR 20-06-104	RH CLEAR 20-06-105 LH CLEAR 20-06-106	CLEAR 20-06-201	INCLUDED
2 1/16" -3 5/8"	BRONZE 20-06-109	BRONZE 20-06-110	RH BRONZE 20-06-115 LH BRONZE 20-06-116	BRONZE 20-06-211	CLEAR 20-06-203 BRONZE 20-06-213
NOTE: MAXIMUM REVEAL 3 5/8"					

TYPE APPLICATION	"C"	"D"
HINGE HUNG	11 7/8"	13 1/4"
SPECIAL CONSULT FACTORY		

LEFT HAND SHOWN
(RIGHT HAND MIRROR IMAGE)

FOR SLIMLINE HEADER

TITLE: ELECTRA 150 INSTALLATION for HINGE HUNG DOORS

DATE: 2/20/[illegible]

besam

171 TWIN RIVERS DR.
EAST WINDSOR, N.J. 08520
609-443-5800

DWG. NO.: D-15001

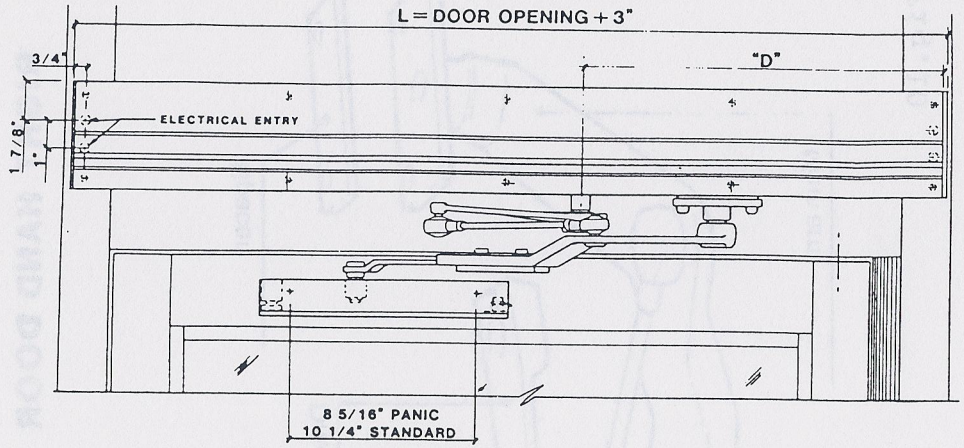

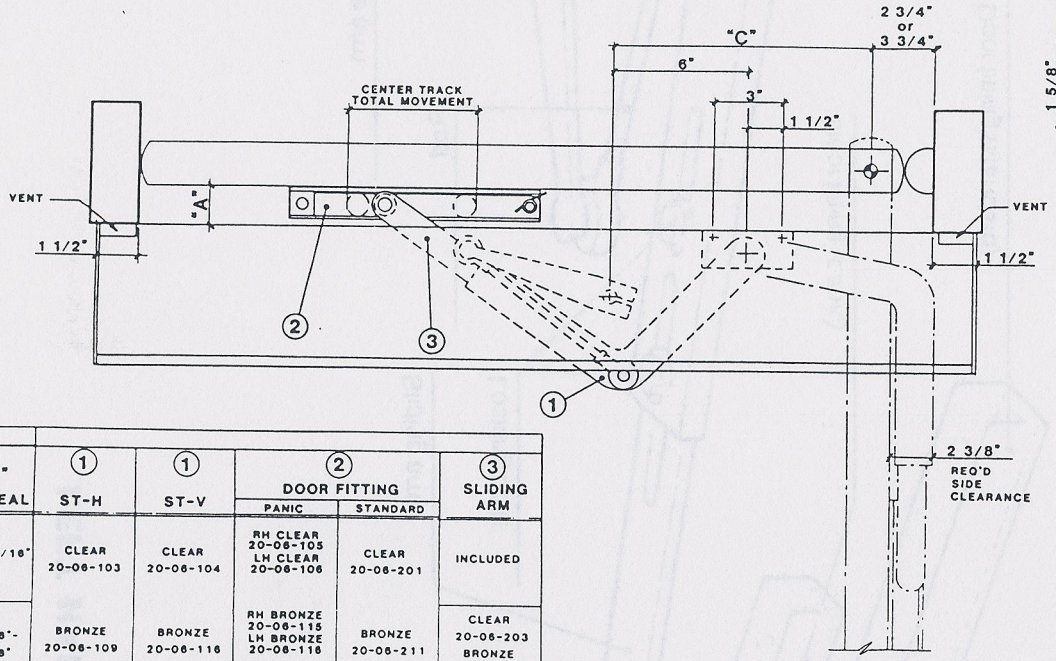

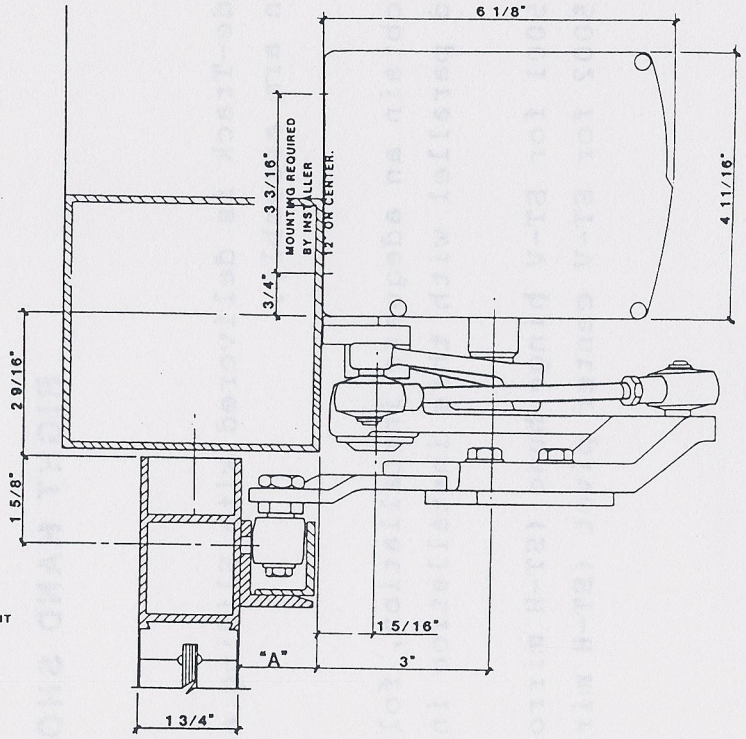

"A" REVEAL	1 ST-H	1 ST-V	2 DOOR FITTING PANIC	2 DOOR FITTING STANDARD	3 SLIDING ARM
0"-2 1/16"	CLEAR 20-06-103	CLEAR 20-06-104	RH CLEAR 20-06-105 LH CLEAR 20-06-106	CLEAR 20-06-201	INCLUDED
2 1/16"-3 5/8"	BRONZE 20-06-109	BRONZE 20-06-116	RH BRONZE 20-06-115 LH BRONZE 20-06-116	BRONZE 20-06-211	CLEAR 20-06-203 BRONZE 20-06-213
NOTE: MAXIMUM REVEAL 3 5/8"					

TYPE APPLICATION	"C"	"D"
2 3/4" C.P.	11"	15 1/8"
3 3/4" C.P.	11"	16 1/8"
SPECIAL CONSULT FACTORY		

LEFT HAND SHOWN
(RIGHT HAND MIRROR IMAGE)
FOR SLIMLINE HEADER

TITLE: ELECTRA 150 INSTALLATION for CENTER PIVOT DOORS

DATE: 2/20/86

besam
171 TWIN RIVERS DR.
EAST WINDSOR, N.J. 08520
609-443-5800

DWG. NO. D-15002

INSTALLATION PARALLEL ARM SYSTEM

RIGHT HAND DOOR **LEFT HAND DOOR**

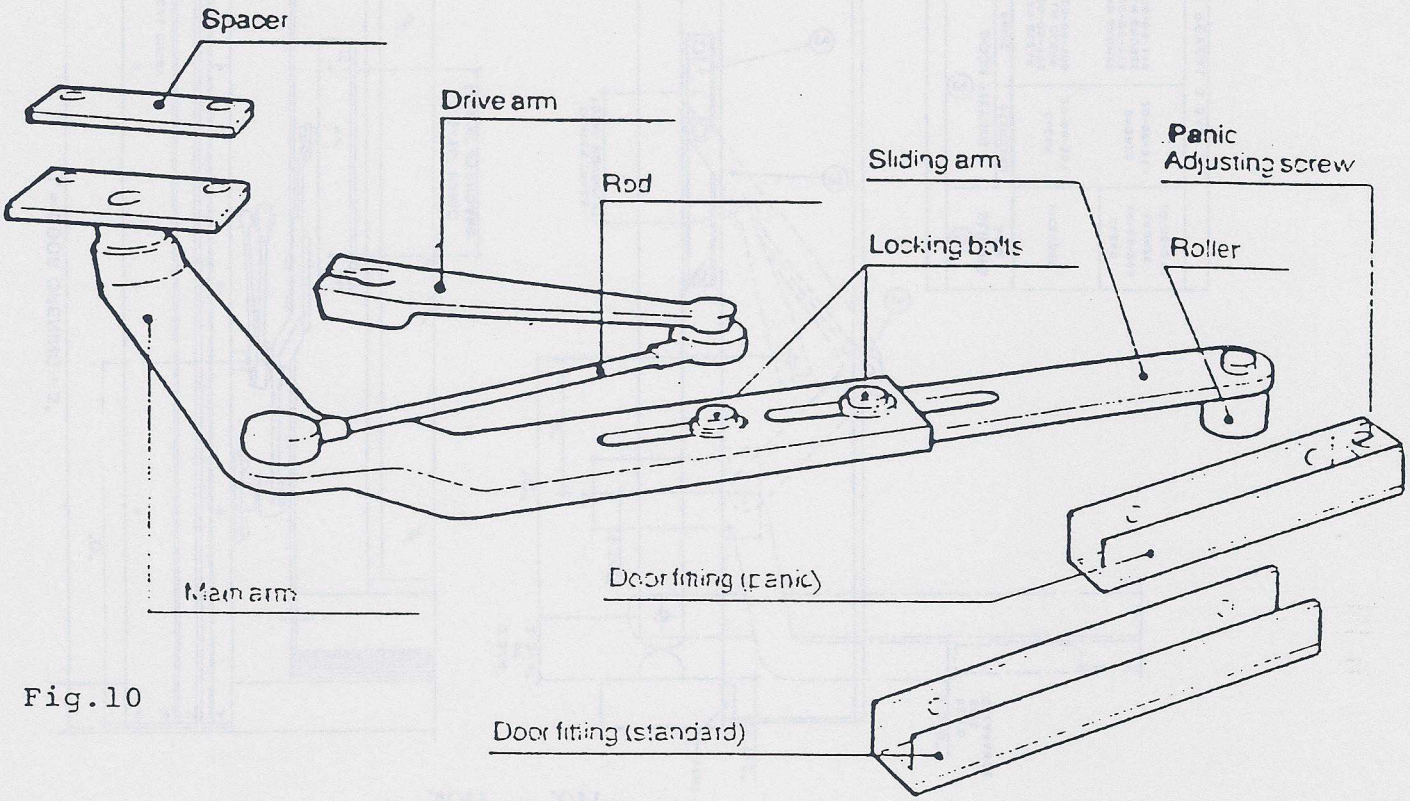

Fig.10

RIGHT HAND SHOWN

Slide-Track is delivered with Sliding arm, Drive arm, Rod and Main arm assembly.

To obtain an adequate installation, following drawings are to be used parallel with this installation instruction.

D-15001 for ST-V hinge hung (ST-H mirror image)
D-15002 for ST-V center pivot (ST-H mirror image)

INSTALLATION PARALLEL ARM SYSTEM

RIGHT HAND DOOR **LEFT HAND DOOR**

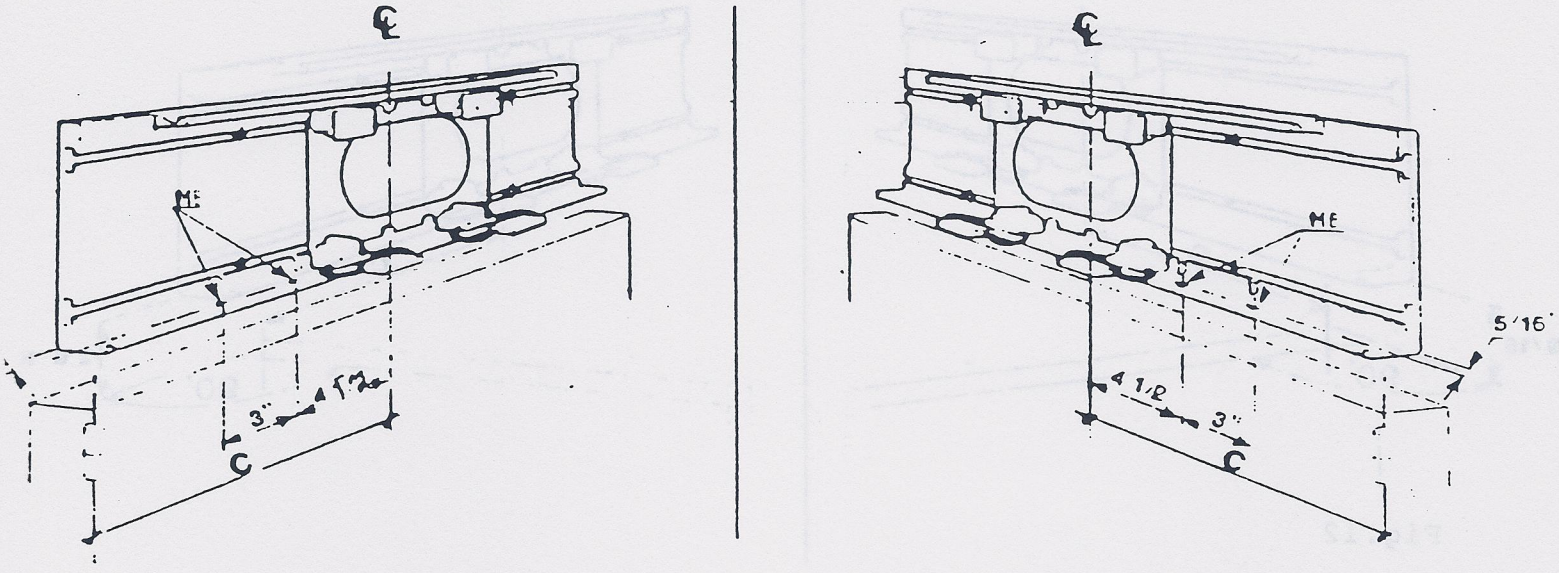

Fig.11

PREPERATION FOR MAIN ARM

1. Mark the spindle center line "C" dimension (see installation dwgs) on the mounting surface.
2. Mark the operator spindle center line on the mounting back plate.
3. Drill and install M-8 nut inserts for the Track system (Fig.11) as shown in installation drawings.

INSTALLATION PARALLEL ARM SYSTEM

RIGHT HAND DOOR

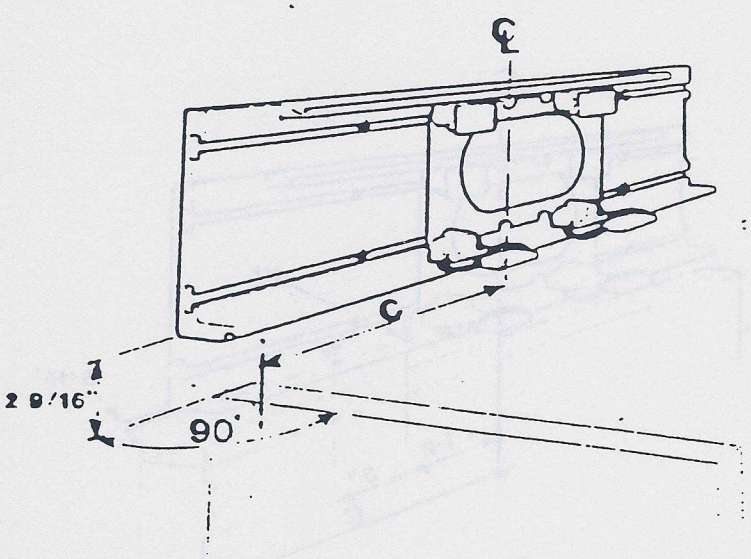

LEFT HAND DOOR

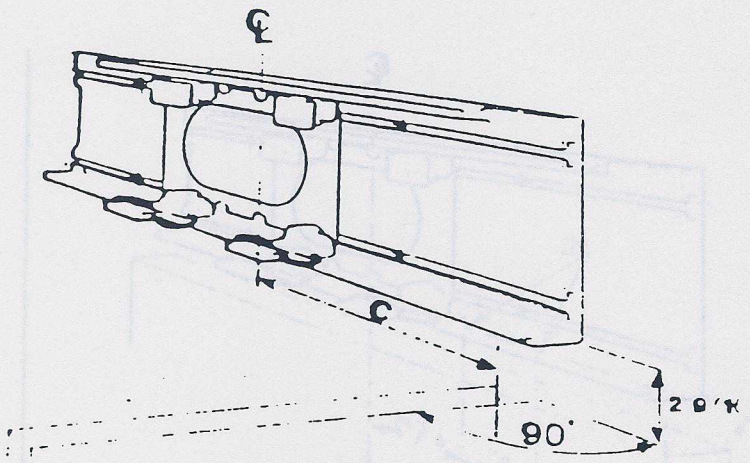

Fig.12

INSTALLING BACK PLATE

4. Mark the required height for the operator when using the Slide Track system (see installation dwgs).
5. Using the mounting back plate as a template, mark the mounting holes and electrical inlets.
6. Check that the mounting surface has the necessary reinforcement. Drill and tap or install rivnuts. Run electrical power.
7. Install and ensure that the mounting back plate is level.

NOTE: The full length back plate has only 4 pre-drilled mounting holes. Additional holes must be prepared by the installer at least 12" on center in both the upper and lower slotted nut areas.

8. Follow operator installation steps on page 4.
9. Install the Slide Track system to the operator.

INSTALLATION PARALLEL ARM SYSTEM

RIGHT HAND DOOR **LEFT HAND DOOR**

MOUNTING OF THE MAIN ARM

Ensure that the proper Sliding arm is mounted on the Main arm. Two sizes for different reveals are available. The short one is always factory mounted on the Main arm and covers reveals up to 2 1/16" - 3 5/8". Slacken the two locking bolts, keeping the sliding arm in position, and move it to its inner position. Close the door. Mount the Main arm with enclosed spacer in the two M-8 nut inserts on the under side of the back plate, tighten the bolts properly.

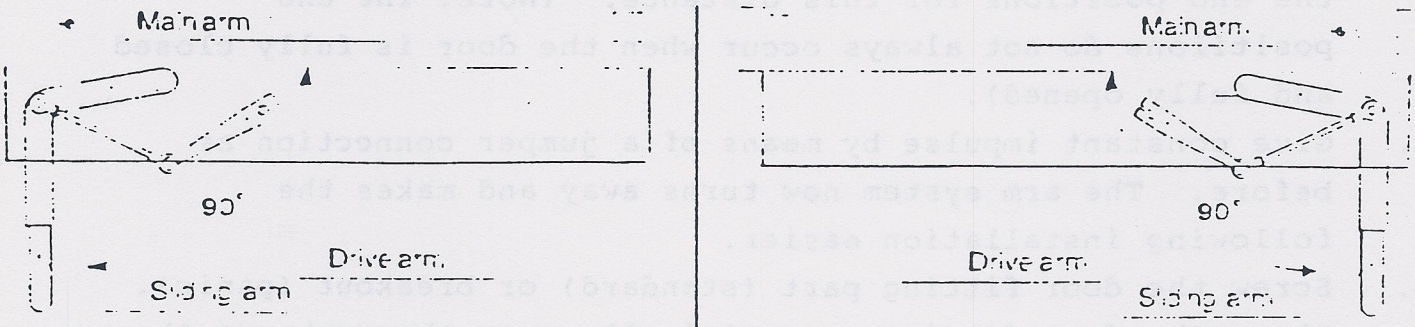

Fig.13

Create a constant impulse by means of a jumper between either the two inner or the two outer impulse input terminals on the PC-board. The motor will start and the shaft of the operator turns to its open position. Open the door approximate 90 degrees and let the Main arm touch to the door as shown in fig. 13. Mount the Drive arm on the operator shaft with door and Main arm in this position. Ensure that the grooves fit correctly so that they do not get damaged when the arm is tightened. Fasten the screw properly.

INSTALLATION PARALLEL ARM SYSTEM

RIGHT HAND DOOR **LEFT HAND DOOR**

MOUNTING OF THE DOOR FITTING

1. Remove the jumper connection. The motor turns off, and the arm system pulls the door towards closed position and stops when the Drive arm hits the wall. (Install a rubber tab at this location.)
2. Pull out the Drive arm from the wall and place a spacer about 3/8" thick between the wall and the Drive arm.
3. Adjust the Sliding arm so that it is in contact with the door, and fasten the two locking bolts properly.
4. During the opening and closing movements of the door, the Sliding arm will move a certain distance on the door. Mark the end positions for this distance. (Note: The end positiions do not always occur when the door is fully closed and fully opened).
5. Give constant impulse by means of a jumper connection as before. The arm system now turns away and makes the following installation easier.
6. Screw the door fitting part (standard) or breakout (panic). Place the door fitting symmectrically over the marks on the door with the center of the fastening holes 1 5/8" from the top edge of the door. Mark on the door the fastening holes. Drill, tap and fasten the door fitting with suitable screws.
7. Remove the jumper connection. The arm system moves back and stops when the roller on the Sliding arm hits the door fitting. Screw the door fitting together again (standard) or reset it (panic).
8. Push the door to its fully open position. Check that it can open at least 90 degrees and that the roller runs easily in the track of the door fitting. Check also that the arm system operates without any problems.
9. If the panic door fitting with requirements on panic breakout is installed, the panic force is to be adjusted to a suitable value. The adjusting screw is marked in fig.10, page 10. If panic door fitting is installed without requirements on panic breakout, the adjusting screw is to be screwed tight.

ADJUSTMENT

ADJUSTING THE OPENING AND CLOSING SPEEDS

When the impulse is given, the door opens electro-hydraulically at high speed, slowing down to low speed for the last 25 degrees before maximum opening position is reached.
At the end of the time during which the door is held open, which is set by a time delay potentiometer on the PC-board, the door closes by spring action at high speed, slowing down to low speed for the last 10 degrees before closed position is reached. The speeds are factory pre-set but can be adjusted by means of the four valve screws marked 1, 11, 111 and 1111 on the hydraulic unit. Minimum and maximum speeds are obtained by turning the screws approximately 1 revolution. Oil pressure/opening power is factory pre-set and should not be changed. However, for extremely heavy doors and high adverse wind pressure, it may be necessary to increase the pressure. This increases, however, wear and tear on the unit. Pressure is increased by turning clockwise.

LEFT HAND INSTALLATION

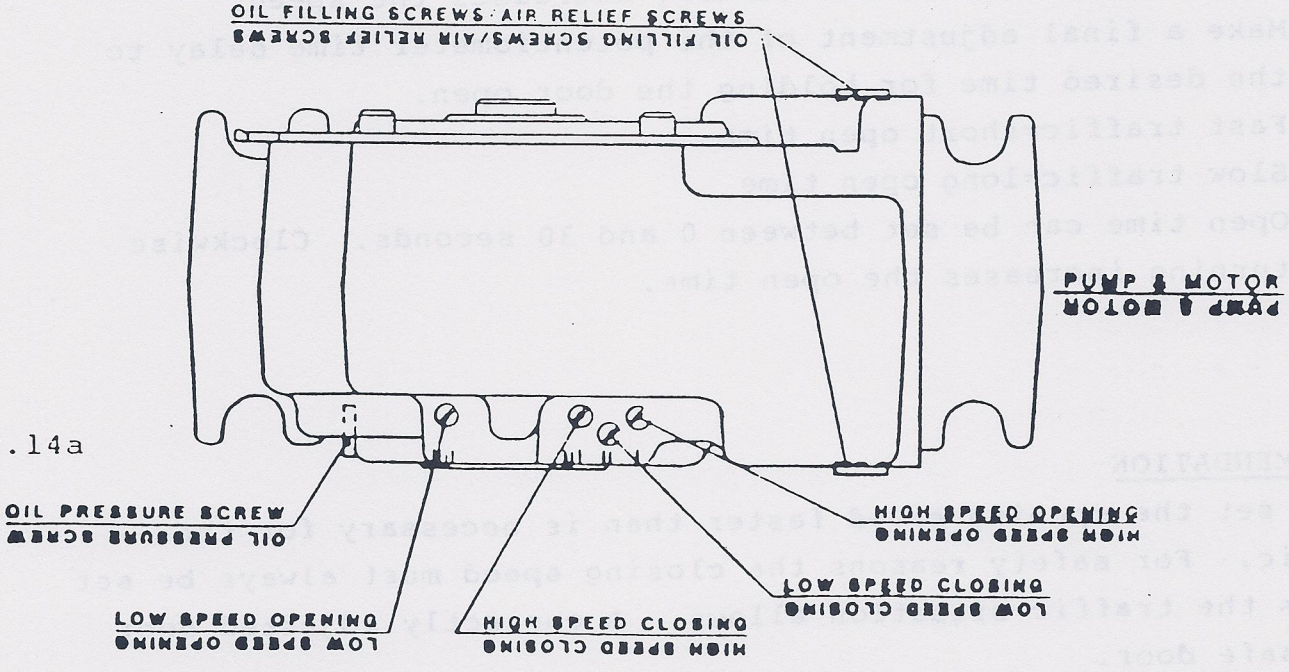

Fig.14a

RIGHT HAND INSTALLATION

ADJUSTMENT

ADJUSTMENT AT INSTALLATION (see fig.14a)

1. Open the upper air relief screw 2-3 turns.
2. Set the time potentiometer screw as in fig. 14b.

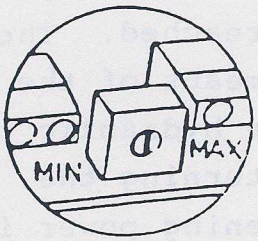

Fig.14b

3. Actuate an opening impulse and adjust valve screws 1 and 1111 to obtain the desired opening speed and a smooth braking of the door. Clockwise turning decreases the speed.
4. Actuate an opening impulse and adjust valve screws 11 and 111 to obtain the desired closing speed and a smooth braking of the door. Clockwise turning decreases the speed.
5. Make a final adjustment of the potentiometer time delay to the desired time for holding the door open.
   Fast traffic=short open time
   Slow traffic=long open time
   Open time can be set between 0 and 30 seconds. Clockwise turning increases the open time.

RECOMMENDATION

Never set the opening speed faster than is necessary for the traffic. For safety reasons the closing speed must always be set low as the traffic situation allows. A correctly adjusted door is a safe door.

FITTING THE COVER

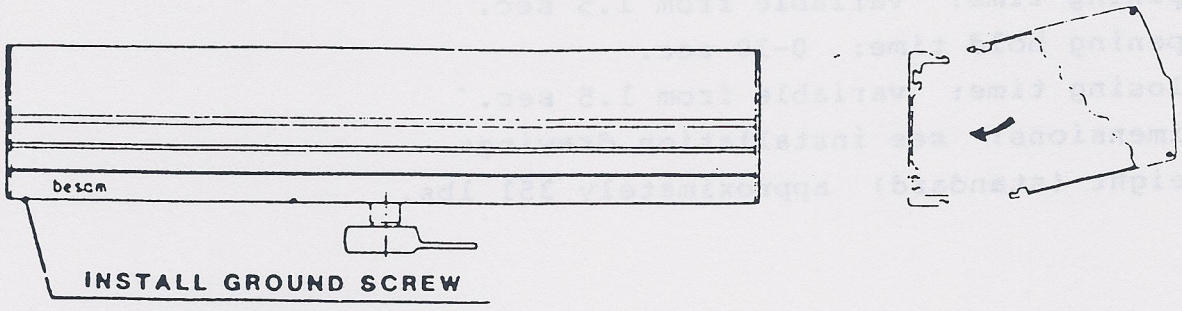

Fig.15

COVER INSTALLATION

Push the cover in at the upper edge of the mounting back plate so that it catches. Pull it down so that it snaps in over the lower edge of the mounting back plate. To remove, grasp both sides of the cover, pull downwards and at the same time twist outwards to release the lower catch. Release the upper catch by pressing lightly with the palms of both hands against the underside of the cover by the sides, approximately 2" from the wall. Alternatively, the upper catch can be released by lifting with the aid of ventilation holes on the top of the cover.

To obtain sufficient grounding between the mounting back plate and the cover, the enclosed grounding screw must be fastened in the pre-drilled hole in the mounting back plate after installing the cover. The washer must be placed so that it is in contact with the mounting back plate and the cover when the screw is tightened.

TECHNICAL DATA

1. Power supply: 110V 60Hz
2. Power consupmtion: max. 200W
3. Fuses: see connection drawing, page 20
4. Thermo-Couple: automatic cut out of motor if overhead
5. Opening time: variable from 1.5 sec.
6. Opening hold time: 0-30 sec.
7. Closing time: variable from 1.5 sec.
8. Dimensions: see installation drawings
9. Weight (standard) approximately 351 lbs.

FAULT FINDING PROCEDURES

(See also connection DWG for each control unit, page 20)

THE DOOR DOES NOT OPEN - the motor does not start	Pwr switch is set off	Change the setting of the switch
	Jumper is missing between 10-11 & 12-13	Jump the terminals
	The switches of the function selector (FS) are set incorrect	Check the setting of the switches
	Supply voltage is missing	Check the voltage between terminals 1 & 2
	Fuse has blown	Replace fuse
	Actuating device not functioning	A test jumper between impulse inputs
- the motor starts	Wrong preload angle of the air system	Check preload of air system

FAULT FINDING PROCEDURES (Continue)

-the motor starts	The valve for high speed opening (1) is closed	Adjust the valve

THE DOOR DOES NOT CLOSE

-motor does not switch off	Constant impulse	Disconnect actuating devices and, if necessary replace PC-board

FAULT FINDING PROCEDURES

(Also see connection drawing for control unit.)

THE DOOR DOES NOT OPEN - the motor does not start	Control switch is set to off.	Change the setting of the switch.
	Main supply voltage is missing.	Check the voltage between terminals 1 and 2.
	Fuse has blown.	Replace fuse.
	Actuating device not functioning.	Test with jumper wire between opening impulse inputs.

THE DOOR DOES NOT OPEN - the motor does not start	Safety mat or device shorted.	Remove device and retest opening.
	Starting capacitor defective.	Replace and retest.
THE DOOR DOES NOT OPEN - the motor starts	Wrong pre-load angle on the Arm System.	Check and readjust arm pre-load.
	The valve for high speed opening (I) is closed.	Adjust the valve.
	Operator spindle shaft is loose.	Secure properly.
	Fluid level too low.	Check level, correct leak and readjust.
THE DOOR DOES NOT CLOSE - motor runs continuously	Shorted opening/ safety impulse.	Disconnect activating devices.
	Defective PCB.	Replace PCB.

REV A: CSD-120 620115 WAS CSD-7-10 653580 ; CSD-S 620114 WAS CSD-S-11C 653086 ; CLMC | 12-4-89

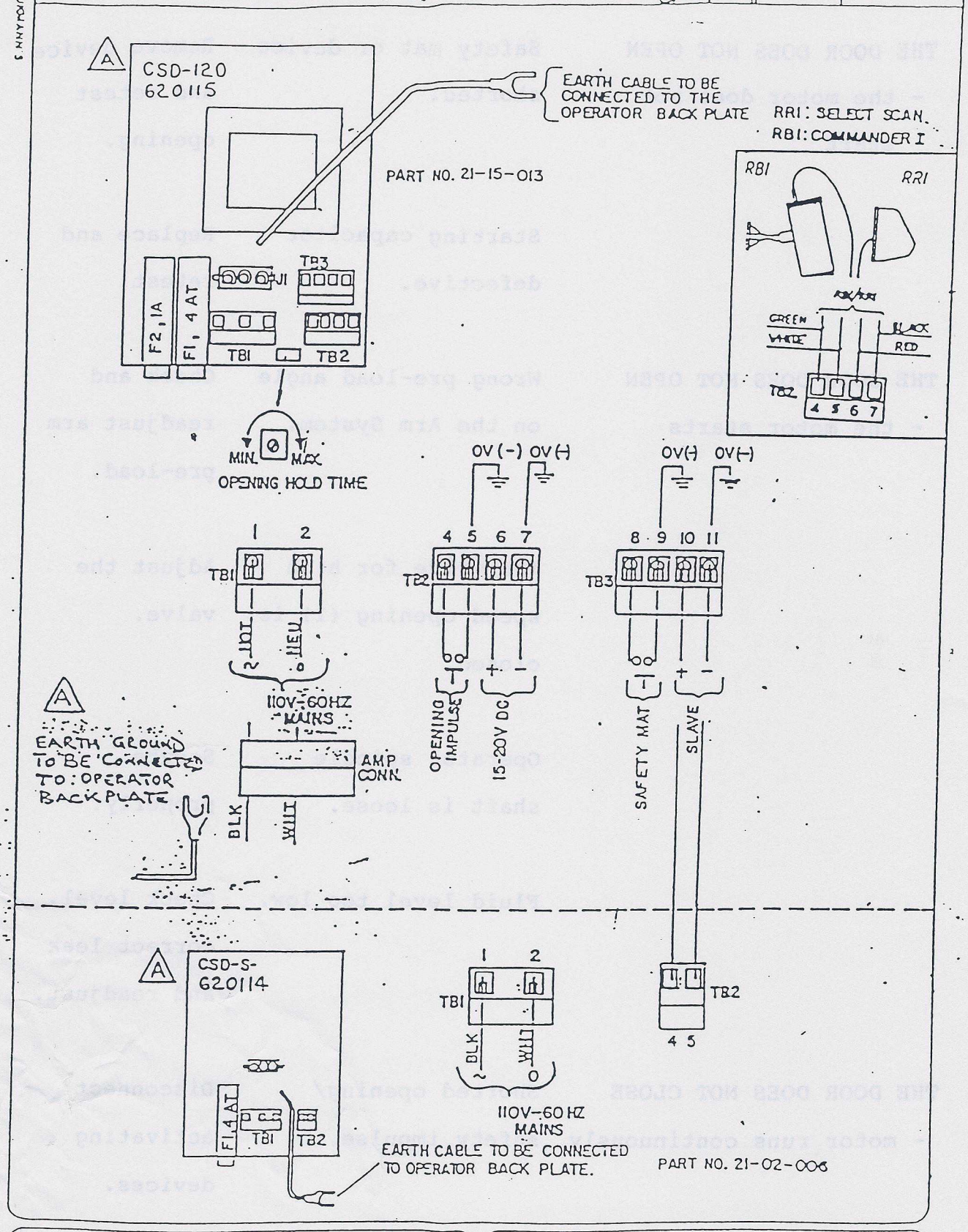

ELECTRA 150
CONNECTION DWG.

besam®
171 TWIN RIVERS DRIVE
EAST WINDSOR, N.J.
609-443-5800 08520

DATE:	DRAWN BY:	DWG NO:
3/87	JWB	A-10102

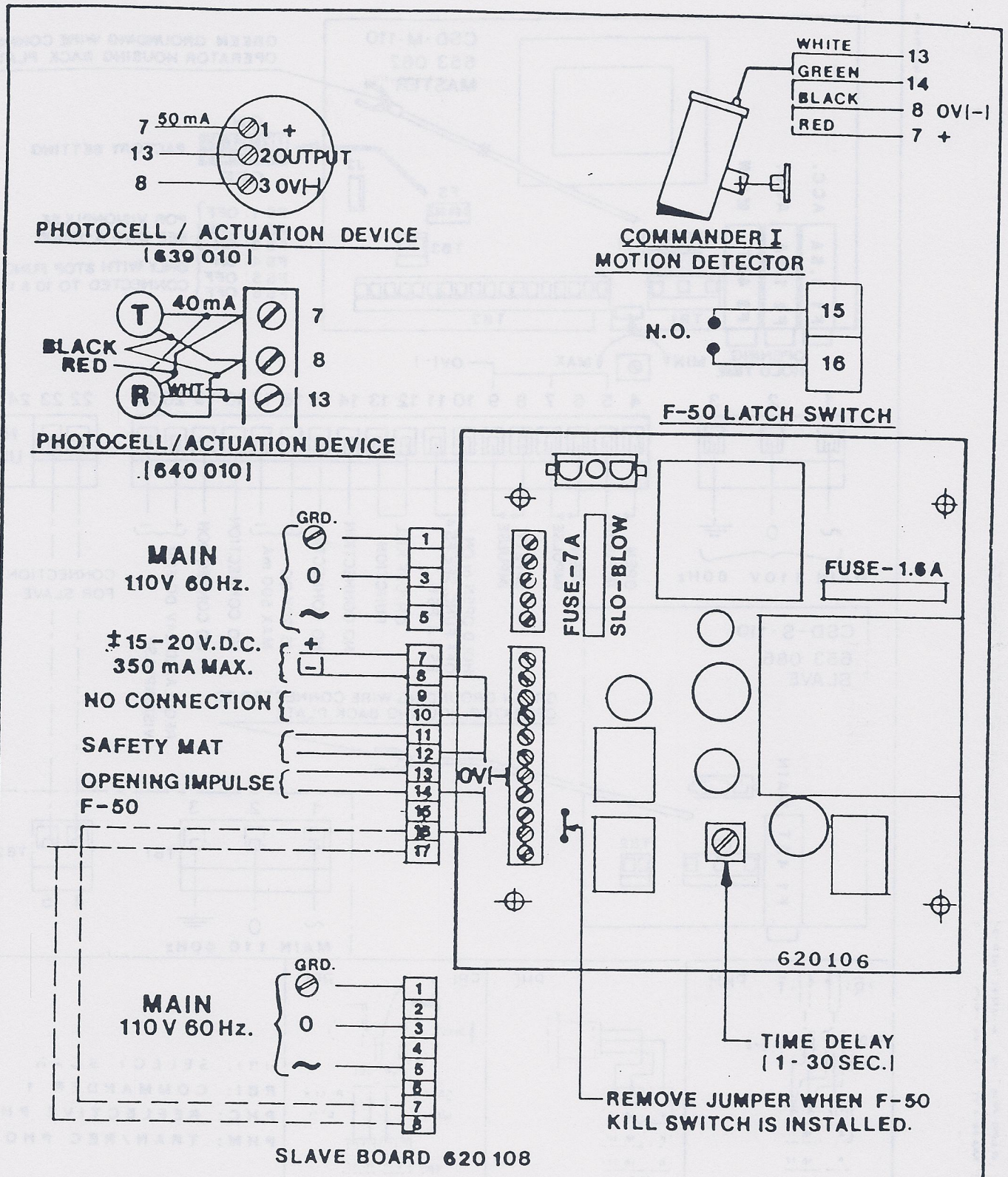

ITEM	QTY	PART NAME	MATERIAL	DWG/DET NO	NOTE

besam®

50 LAKE DRIVE
EAST WINDSOR NEW JERSEY
08520
609 443 5800

ELECTRA 150/
ECONO-SWING 150 /
FREEDOM 250 SERIES

WIRING DIAGRAM

REPLACES	REPLACED BY
W.E.K.	DATE 7-18-83

DWG NO

A- 18011

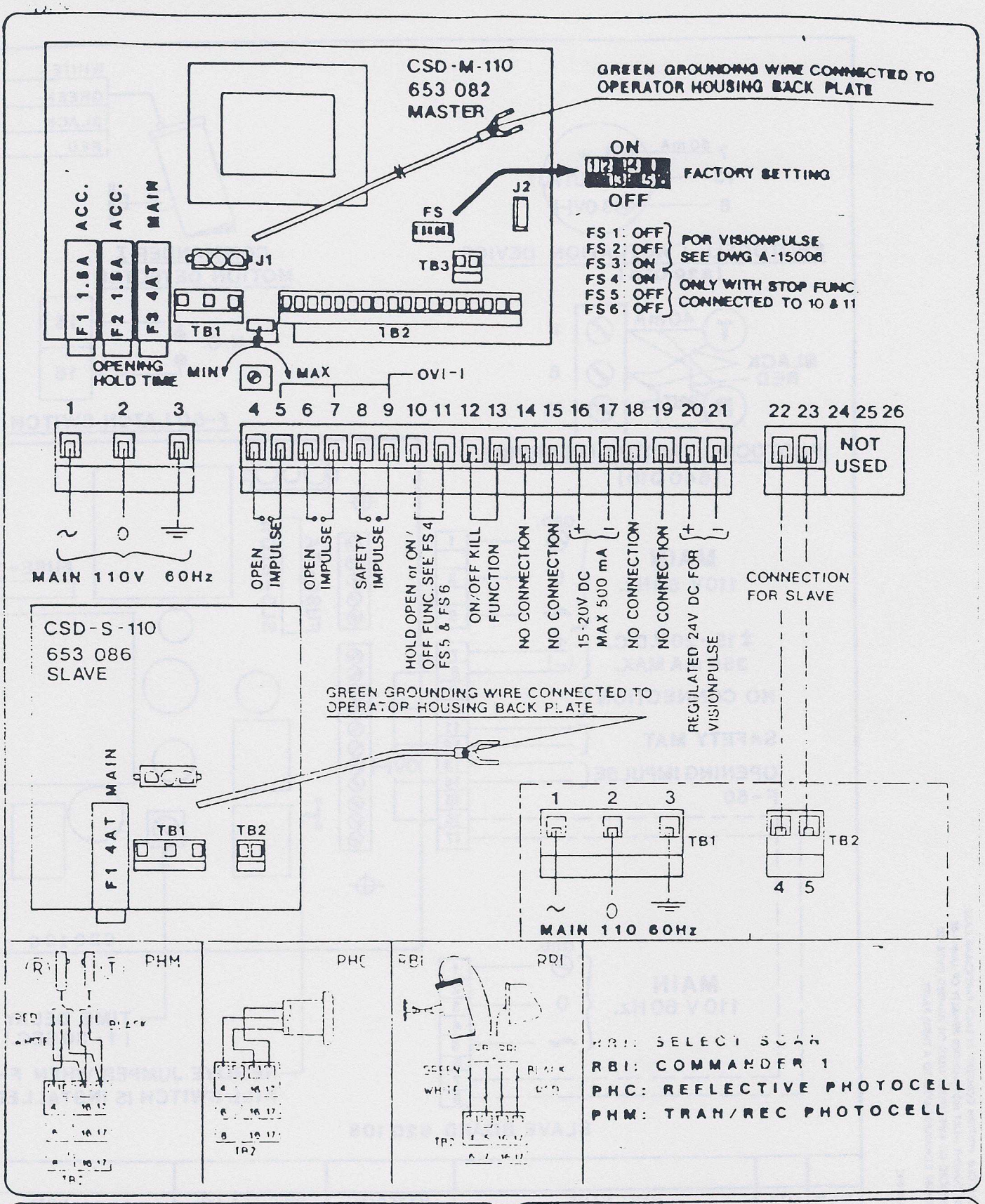

ELECTRA 150 CONNECTION DWG SPECIAL

besam

171 TWIN RIVERS DRIVE
EAST WINDSOR, N.J.
609 443 5800 08520

DATE	DRAWN BY	DWG NO
2-27-86	WDT	A-15006

Spare Parts

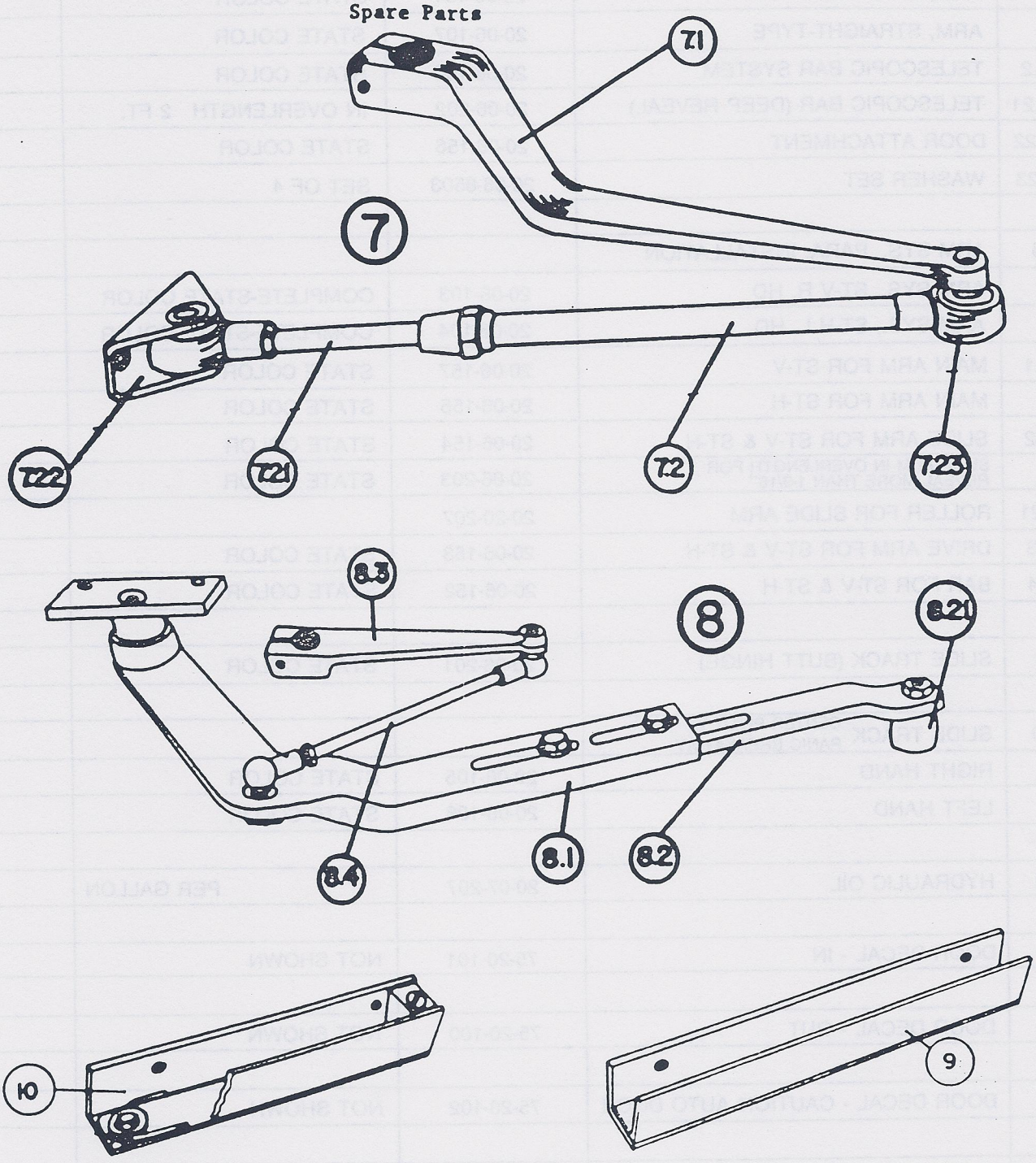

ITEM	PART DESCRIPTION	PART NUMBER	REMARKS	LIST PRICE
7	ARM SYS. REG. INSTALLATION			
	ARM SYS. Z-TYPE	20-06-101	COMPLETE-STATE COLOR	
	ARM SYS. STRAIGHT-TYPE	20-06-102	COMPLETE-STATE COLOR	
7.1	ARM, Z-PORTION ONLY	20-06-151	STATE COLOR	
	ARM, STRAIGHT-TYPE	20-06-107	STATE COLOR	
7.2	TELESCOPIC BAR SYSTEM	20-06-150	STATE COLOR	
7.21	TELESCOPIC BAR (DEEP REVEAL)	20-06-202	IN OVERLENGTH 2 FT.	
7.22	DOOR ATTACHMENT	20-06-156	STATE COLOR	
7.23	WASHER SET	20-08-8503	SET OF 4	
8	ARM SYS., PARA. INSTALLATION			
	ARM SYS., ST-V R. HD	20-06-103	COMPLETE-STATE COLOR	
	ARM SYS., ST-H L. HD	20-06-104	COMPLETE-STATE COLOR	
8.1	MAIN ARM FOR ST-V	20-06-157	STATE COLOR	
	MAIN ARM FOR ST-H	20-06-155	STATE COLOR	
8.2	SLIDE ARM FOR ST-V & ST-H	20-06-154	STATE COLOR	
	SLIDE ARM IN OVERLENGTH FOR REVEAL MORE THAN 1-9/16"	20-06-203	STATE COLOR	
8.21	ROLLER FOR SLIDE ARM	20-20-207		
8.3	DRIVE ARM FOR ST-V & ST-H	20-06-153	STATE COLOR	
8.4	BAR FOR ST-V & ST-H	20-06-152	STATE COLOR	
9	SLIDE TRACK (BUTT HINGE)	20-06-201	STATE COLOR	
10	SLIDE TRACK CENTER PIVOT W/ PANIC BREAKAWAY			
	RIGHT HAND	20-06-105	STATE COLOR	
	LEFT HAND	20-06-106	STATE COLOR	
11	HYDRAULIC OIL	20-07-207	PER GALLON	
12	DOOR DECAL - IN	75-20-101	NOT SHOWN	
13	DOOR DECAL - OUT	75-20-100	NOT SHOWN	
14	DOOR DECAL - CAUTION AUTO DOOR	75-20-102	NOT SHOWN	
15	SPRING TENSION TOOL	21-03-100	NOT SHOWN	
16	RADIAL OIL SEAL TOOL	21-15-100	NOT SHOWN	

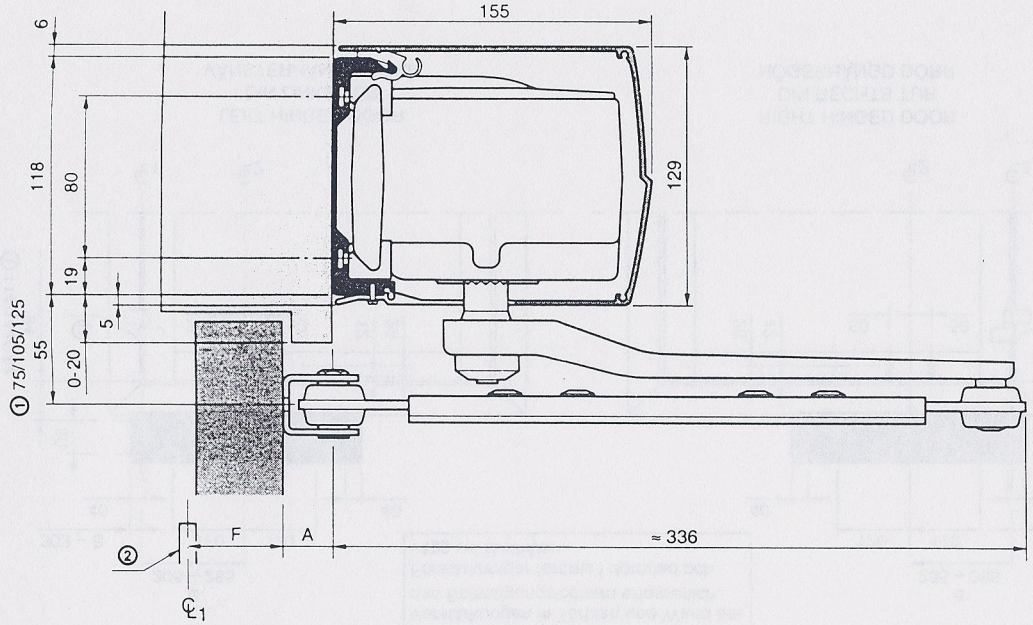

B { See manual / Siehe Handbuch / Se handbok

① { With shaft extension / Mit Achsenverlängerung 20/50/70 mm / Med axelförlängare

② { Pivot or butt hinges / Scharniere oder Pivotscharniere / Pivot- eller kantgångjärn

℄1 { Hinges / Scharniere / Gångjärn

℄2 { Operator drive shaft / Antrieb, Treibwelle / Öppnare, drivaxel

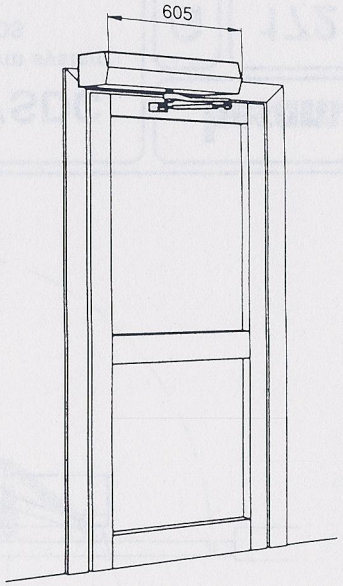

Reinforcements required in door leaf and wall at the fixing holes.
Verstärkungen in Türblatt und Wand bei den Befestigungslöchern erforderlich.
Förstärkningar fordras i dörrblad och vägg vid fästhålen.

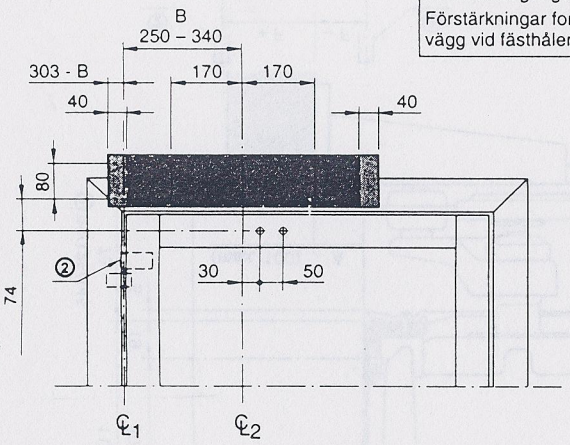

RIGHT HINGED DOOR
DIN RECHTS TÜR
HÖGERHÄNGD DÖRR

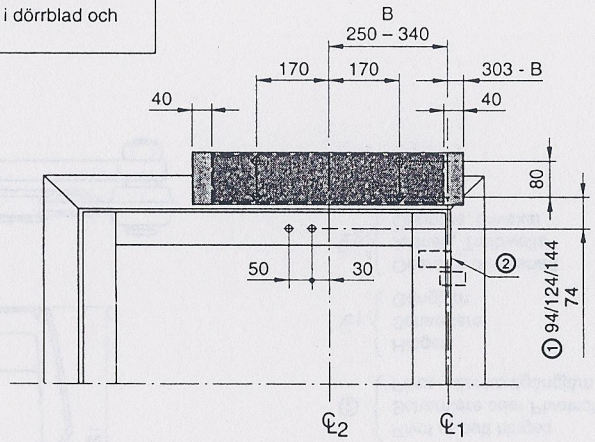

LEFT HINGED DOOR
DIN LINKS TÜR
VÄNSTERHÄNGD DÖRR

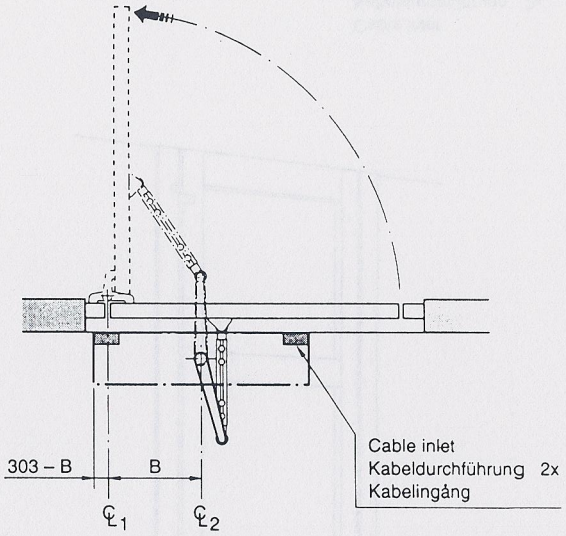

AAB361

Swing door operator
Drehtürantrieb
Slagdörrsöppnare

SDE/SDC
Arm system
SAS

besam

H

172 818

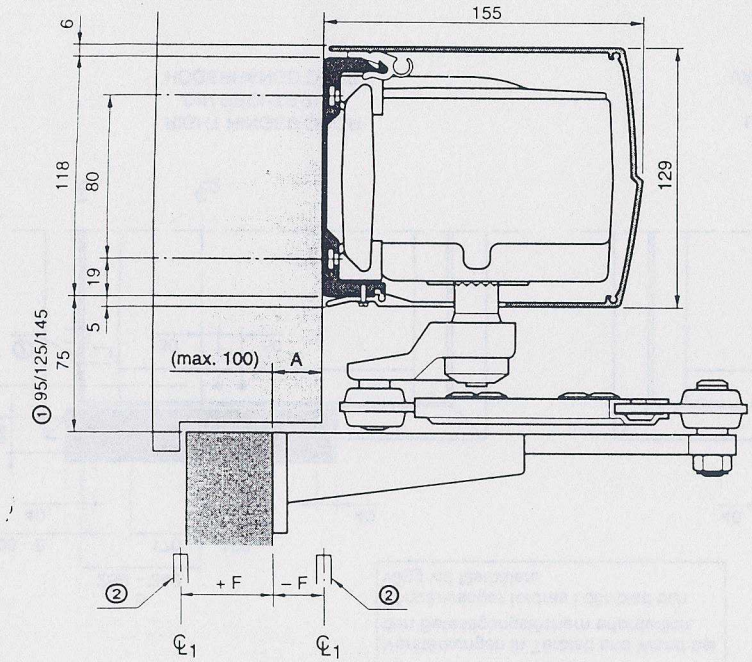

B { See manual / Siehe Handbuch / Se handbok

① { With shaft extension / Mit Achsenverlängerung 20/50/70 mm / Med axelförlängare

② { Pivot or butt hinges / Scharniere oder Pivotscharniere / Pivot- eller kantgångjärn

℄1 { Hinges / Scharniere / Gångjärn

℄2 { Operator drive shaft / Antrieb, Treibwelle / Öppnare, drivaxel

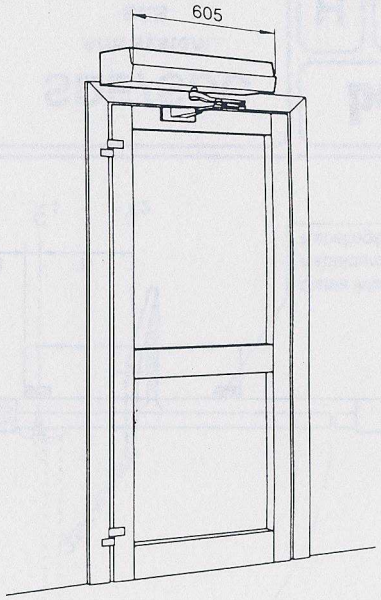

Reinforcements required in door leaf and wall at the fixing holes.
Verstärkungen in Türblatt und Wand bei den Befestigungslöchern erforderlich.
Förstärkningar fordras i dörrblad och vägg vid fästhålen.

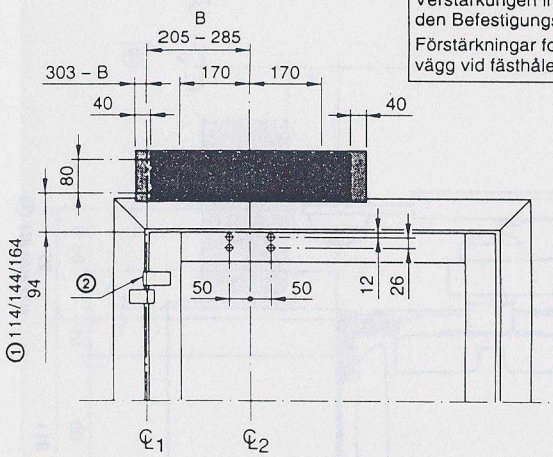

LEFT HINGED DOOR
DIN LINKS TÜR
VÄNSTERHÄNGD DÖRR

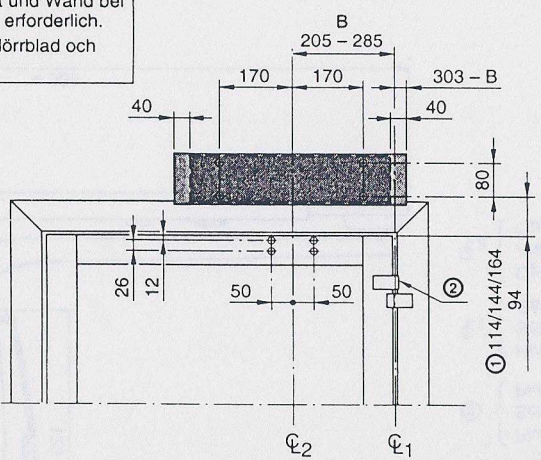

RIGHT HINGED DOOR
DIN RECHTS TÜR
HÖGERHÄNGD DÖRR

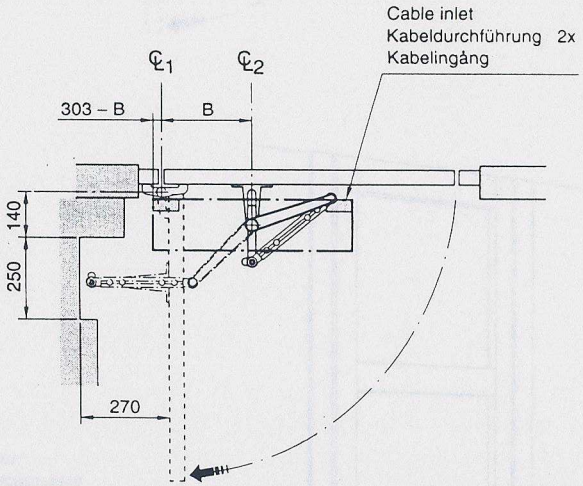

AAB362

Swing door operator
Drehtürantrieb
Slagdörrsöppnare

SDE/SDC
Parallel Arm system
POS

besam

G | 172 821

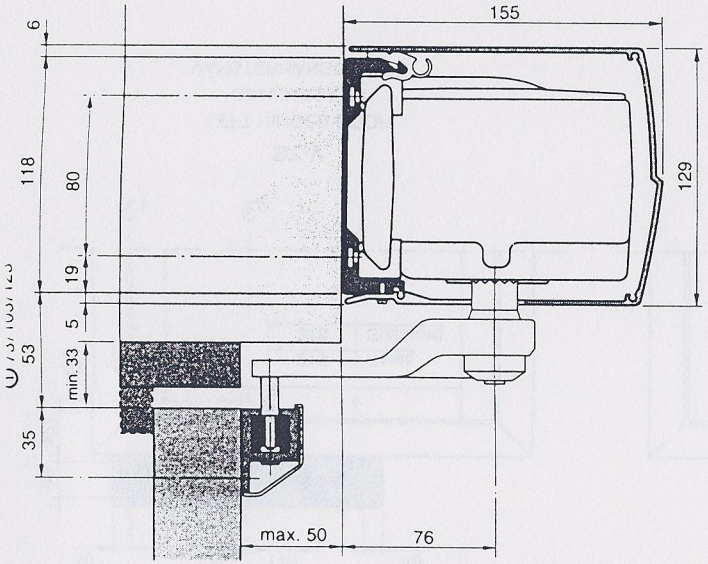

① { With shaft extension / Mit Achsenverlängerung 20/50/70 mm / Med axelförlängare

② { Adjustment screw, break-out force / Justierschraube, Ausbrecherkraft / Justerskruv, utbrytningskraft

③ { Adjust to pivot hinges and door leaf thickness / Zu Pivotscharniere und Türblattstärke anpassen / Anpassas till pivotgångjärn och dörrbladstjocklek

④ { End cover / Endstück / Gavel

⑤ { Arm stop / Armanschlag / Armstopp

℄1 { Hinges / Scharniere / Gångjärn

℄2 { Operator drive shaft / Antrieb, Treibwelle / Öppnare, drivaxel

W { Door leaf width / Türblattbreite / Dörrbladsbredd

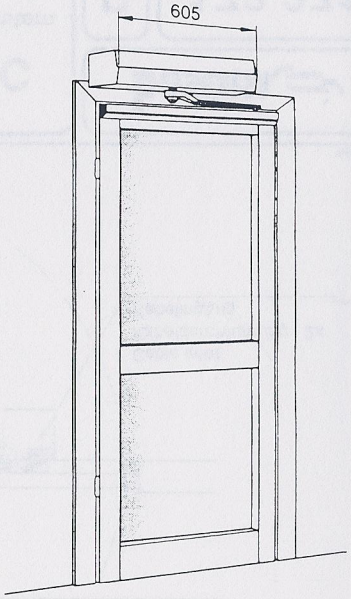

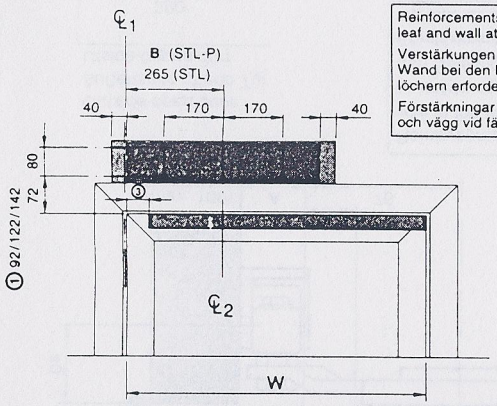

LEFT HINGED DOOR
DIN LINKS TÜR
VÄNSTERHÄNGD DÖRR

Reinforcements required in door leaf and wall at the fixing holes.

Verstärkungen in Türblatt und Wand bei den Befestigungslöchern erforderlich.

Förstärkningar fordras i dörrblad och vägg vid fästhålen.

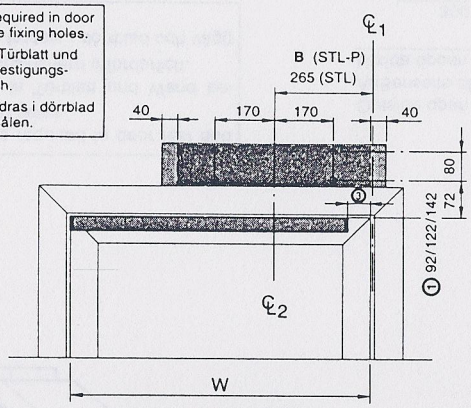

RIGHT HINGED DOOR
DIN RECHTS TÜR
HÖGERHÄNGD DÖRR

STL-P	
W	B
750	205
760	215
770	225
780	235
790	245
800	255
810-1100	265

Note!
STL-P must always be used together with pivot hinges.

Achtung!
STL-P muß immer zusammen mit Pivotscharniere verwendet werden.

Obs!
STL-P måste alltid användas tillsammans med pivotgångjärn.

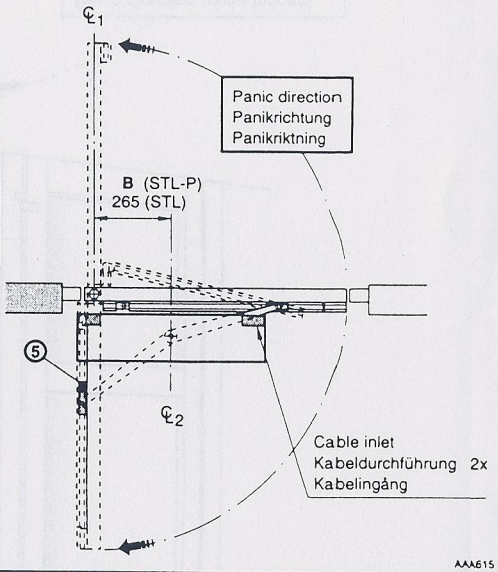

Arm-system	Art. No.	
	Silver Silber Silver	Black Schwarz Svart
STL	173125	173126
STL-P 1)	832430	832431

1) Supplementary panic break-out kit
Panikausbrecherzusatz
Panikutbrytningstillsats

STL-P

Left hinged door shown, right hinged mirror image.

DIN Links Tür gezeigt, DIN Rechts Spiegelbild.

Vänsterhängd dörr visad, högerhängd spegelbild.

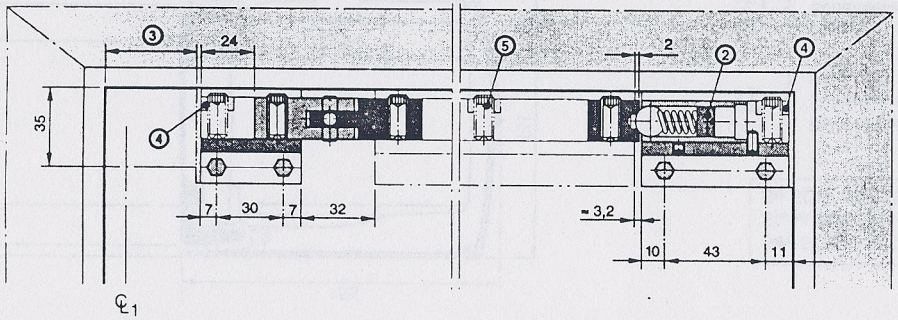

Swing door operator
Drehtürantrieb
Slagdörrsöppnare

SDE/SDC
Arm system
STL
STL-P

besam

D

173 144

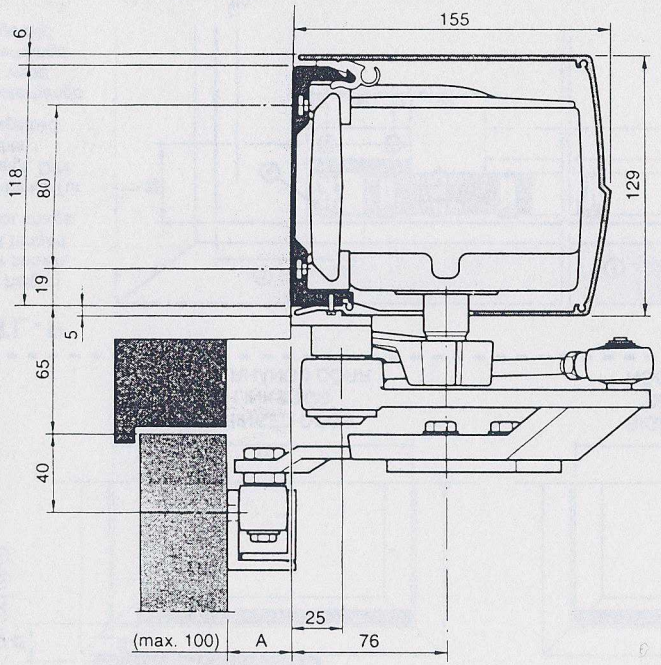

See SDE or SDC manual
Siehe SDE- oder SDC-Handbuch
Se SDE- eller SDC-handbok

① Pivot or butt hinges
Scharniere oder Pivotscharniere
Pivot- eller kantgångjärn

℄1 Hinges
Scharniere
Gångjärn

℄2 Operator drive shaft
Antrieb, Treibwelle
Öppnare, drivaxel

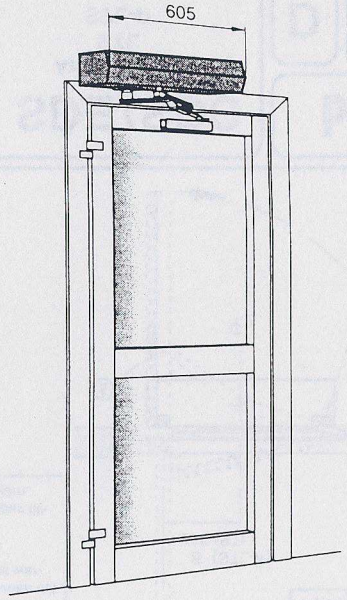

Reinforcements required in door leaf and wall at the fixing holes.
Verstärkungen in Türblatt und Wand bei den Befestigungslöchern erforderlich.
Förstärkningar fordras i dörrblad och vägg vid fästhålen.

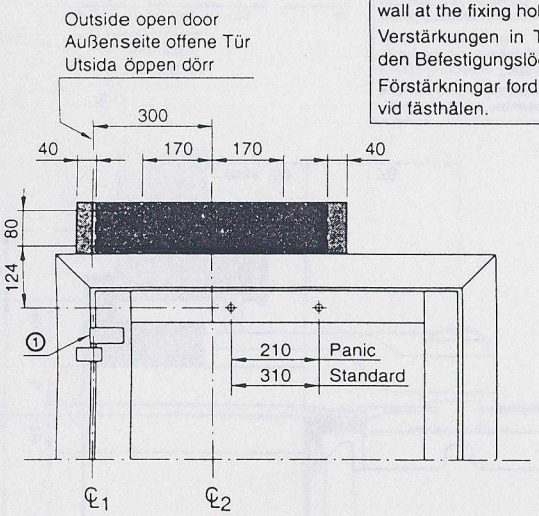

ST-V
LEFT HINGED DOOR
DIN LINKS TÜR
VÄNSTERHÄNGD DÖRR

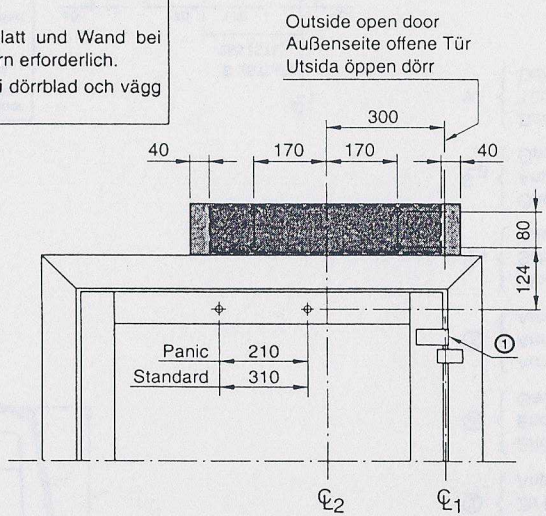

ST-H
RIGHT HINGED DOOR
DIN RECHTS TÜR
HÖGERHÄNGD DÖRR

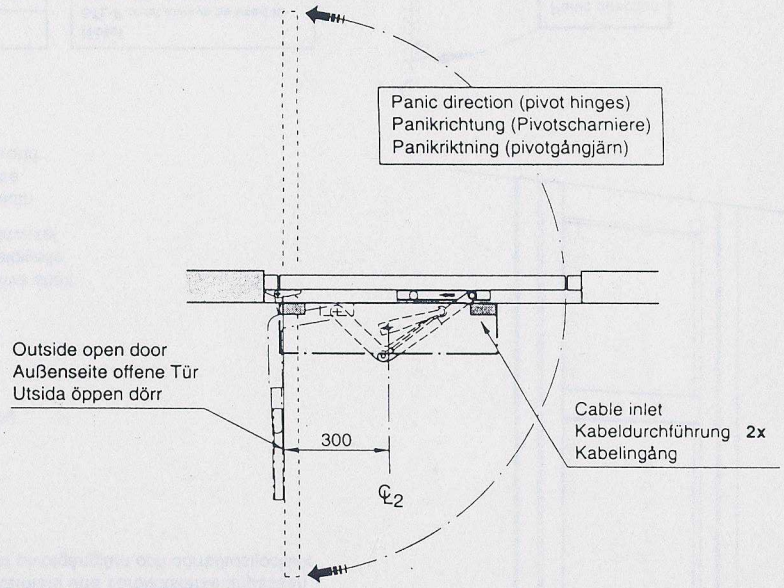

AAB21

Swing door operator
Drehtürantrieb
Slagdörrsöppnare

SDE/SDC
Slide-Track Arm System
ST-V / ST-H

besam

B

173 371